10 Gb/s Tunable DWDM SFP+ 80 km Transceiver

SFP+ Series

- **Up to 11.3 Gb/s data links**
- **Up to 80 km transmission distance on SMF**
- **50 GHz ITU channel spacing**
- **Metal enclosure**
- **2-wire interface with integrated Digital Diagnostic monitoring**
- **Hot-pluggable SFP+ footprint**
- **Compliant with SFF 8472 and SFF 8690**
- **10GBASE-ZR/ZW 10G Ethernet**

Ascent's SFPP-LP-T99R-80 10 Gb/s SFP+ tunable transceiver is an integrated fiber optic transceiver that provides a high-speed serial link at signaling rates from 9.95 Gb/s to 11.3 Gb/s. The module complies with the 10 Gigabit Enhanced Small Form Factor Pluggable (SFP+) multisource agreement - MSA(SFF-8431) and SFF-8432, SFF-8690, and SFF 8472. It complies with the ITU-T G.698.1 standard with 50 GHz channel spacing for SONET/SDH, IEEE DWDM 10GBASE-ZR for up to 80 km (Ethernet), and DWDM 10GFC for up to 80 km (Fiber Channel) applications.

The transceiver integrates the receiver and transmitter path on one module. The transceiver contains a C-band-tunable integrated Mach-Zehnder (MZ) laser, enabling data transmission over single-mode fiber through an industry-standard LC connector. On the receiver side, the 10 Gb/s data stream is recovered from an APD/ trans-impedance amplifier, and passed to an output driver. This module features a hot-pluggable electrical interface.

Key Features

- Supports 9.95 Gb/s to 11.3 Gb/s bit rates
- Monolithically integrated full C-band tunable transmitter and APD receiver
- 50 GHz ITU channel spacing with integrated wavelength locker
- Maximum link length of 80km
- Metal enclosure, for lower EMI
- 2-wire interface with integrated Digital Diagnostic monitoring
- Hot-pluggable SFP+ footprint
- Specifications compliant with SFF 8472 V10.3 & SFF 8690 V1.4
- Compliant with SFP+ MSA with LC connector
- Power dissipation <1.65 W
- Case temperature range: -5 °C to +70 °C

Pin Assignment

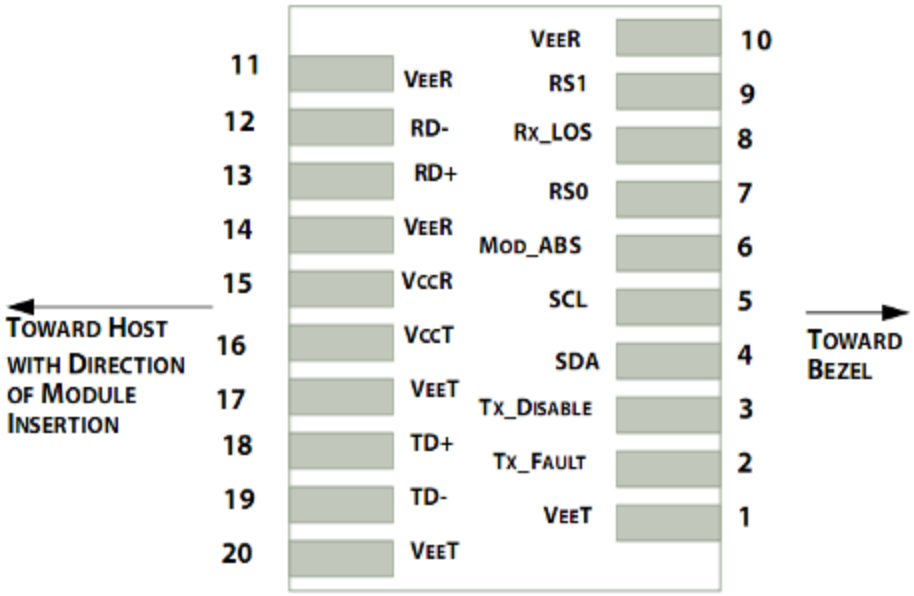

Pin out of Connector Block on Host Board

Pin	Symbol	Name/Description	NOTE
1	V_{EET}	Transmitter Ground (Common with Receiver Ground)	1
2	T_{FAULT}	Transmitter Fault.	2
3	T_{DIS}	Transmitter Disable. Laser output disabled on high or open.	3
4	SDA	2-wire Serial Interface Data Line	4

5	SCL	2-wire Serial Interface Clock Line	4
6	MOD_ABS	Module Absent. Grounded within the module	4
7	RS0	Rate Select 0	5
8	LOS	Loss of Signal indication. Logic 0 indicates normal operation.	6
9	RS1	No connection required	1
10	V_{EER}	Receiver Ground (Common with Transmitter Ground)	1
11	V_{EER}	Receiver Ground (Common with Transmitter Ground)	1
12	RD-	Receiver Inverted DATA out. AC Coupled	
13	RD+	Receiver Non-inverted DATA out. AC Coupled	
14	V_{EER}	Receiver Ground (Common with Transmitter Ground)	1
15	V_{CCR}	Receiver Power Supply	
16	V_{CCT}	Transmitter Power Supply	
17	V_{EET}	Transmitter Ground (Common with Receiver Ground)	1
18	TD+	Transmitter Non-Inverted DATA in. AC Coupled.	
19	TD-	Transmitter Inverted DATA in. AC Coupled.	
20	V_{EET}	Transmitter Ground (Common with Receiver Ground)	1

Notes:

1. Circuit ground is internally isolated from chassis ground.
2. T_{FAULT} is an open collector/drain output, which should be pulled up with a 4.7 kΩ to 10 kΩ resistor on the host board if intended for use. Pull up voltage should be between 2.0 V to Vcc + 0.3 V. A high output indicates a transmitter fault caused by either the TX bias current or the TX output power exceeding the preset alarm thresholds. A low output indicates normal operation. In the low state, the output is pulled to <0.8V.
3. Laser output disabled on T_{DIS} > 2.0 V or open, enabled on T_{DIS} < 0.8 V.
4. Should be pulled up with 4.7 kΩ to 10 kΩ host board to a voltage between 2.0 V and 3.6 V. MOD_ABS pulls line low to indicate module is plugged in.
5. Internally pulled down per SFF-8431 Rev 4.1.
6. LOS is an open collector output. It should be pulled up with 4.7 kΩ to 10 kΩ on the host board to a voltage between 2.0 V and 3.6 V. Logic 0 indicates normal operation; logic 1 indicates loss of signal.

Host – Transceiver Interface Block Diagram

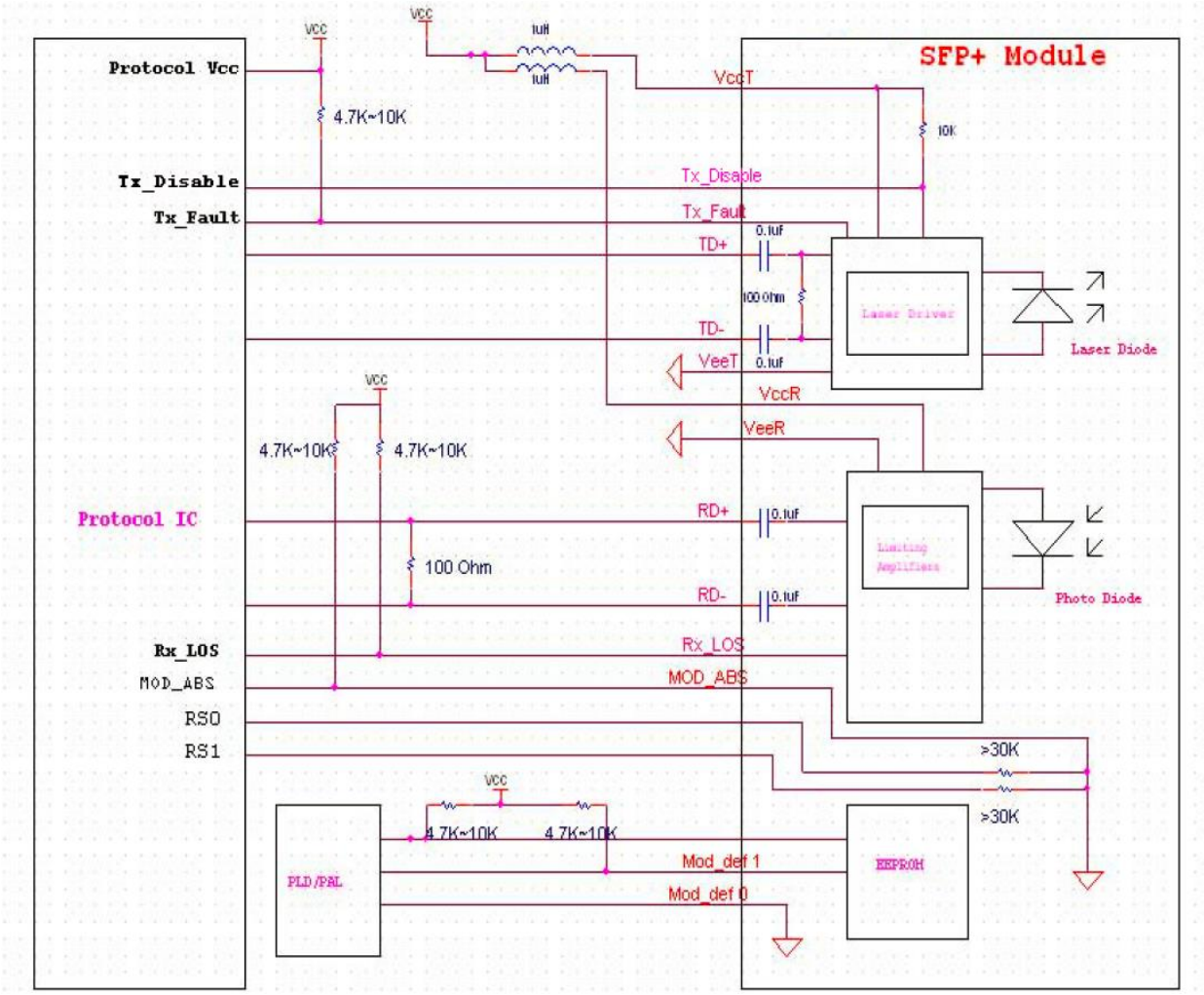

Outline Dimensions

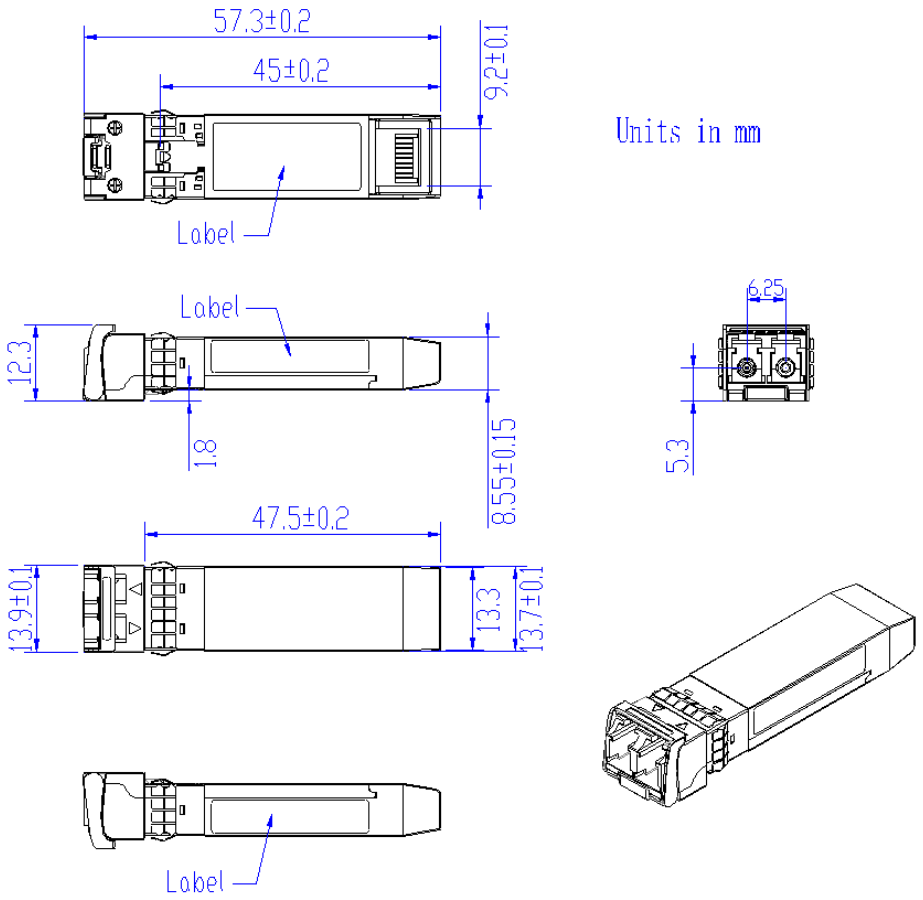

Digital Diagnostic Functions

ASCENT SFPP-LP-T99R-80 transceivers support the 2-wire serial communication protocol as defined in the SFP+ MSA.

The standard SFP serial ID provides access to identification information that describes the transceiver's capabilities, standard interfaces, manufacturer, and other information.

Additionally, ASCENT SFP+ transceivers provide a unique enhanced digital diagnostic monitoring interface which allows real-time access to device operating parameters such as transceiver temperature, laser bias current, transmitted optical power, received optical power, and transceiver supply voltage. It also defines a sophisticated system of alarm and warning flags which alerts end users when particular operating parameters are outside of a factory set normal range.

The SFP MSA defines a 256-byte memory map in EEPROM that is accessible over a 2-wire serial interface at the 8-bit address 1010000X (A0h). The digital diagnostic monitoring interface makes use of the 8-bit address 1010001X (A2h), so the originally defined serial ID memory map remains unchanged.

The operating and diagnostics information is monitored and reported by a Digital Diagnostics Transceiver Controller (DDTC) inside the transceiver, which is accessed through a 2-wire serial interface. When the

serial protocol is activated, the serial clock signal (SCL, Mod Def 1) is generated by the host. The positive edge clocks data into the SFP transceiver into those segments of the E2PROM that are not write-protected. The negative edge clocks data from the SFP transceiver. The serial data signal (SDA, Mod Def 2) is bi-directional for serial data transfer. The host uses SDA in conjunction with SCL to mark the start and end of serial protocol activation. The memories are organized as a series of 8-bit data words that can be addressed individually or sequentially.

Wavelength Guide Table

Channel	Wavelength (nm)	Frequency (THz)	Channel	Wavelength (nm)	Frequency (THz)
1	1568.36	191.15	51	1548.11	193.65
2	1567.95	191.20	52	1547.72	193.70
3	1567.54	191.25	53	1547.32	193.75
4	1567.13	191.30	54	1546.92	193.80
5	1566.72	191.35	55	1546.52	193.85
6	1566.31	191.40	56	1546.12	193.90
7	1565.90	191.45	57	1545.72	193.95
8	1565.50	191.50	58	1545.32	194.00
9	1565.09	191.55	59	1544.92	194.05
10	1564.68	191.60	60	1544.53	194.10
11	1564.27	191.65	61	1544.13	194.15
12	1563.86	191.70	62	1543.73	194.20
13	1563.45	191.75	63	1543.33	194.25
14	1563.05	191.80	64	1542.94	194.30
15	1562.64	191.85	65	1542.54	194.35
16	1562.23	191.90	66	1542.14	194.40
17	1561.83	191.95	67	1541.75	194.45
18	1561.42	192.00	68	1541.35	194.50
19	1561.01	192.05	69	1540.95	194.55
20	1560.61	192.10	70	1540.56	194.60
21	1560.20	192.15	71	1540.16	194.65
22	1559.79	192.20	72	1539.77	194.70
23	1559.39	192.25	73	1539.37	194.75
24	1558.98	192.30	74	1538.98	194.80
25	1558.58	192.35	75	1538.58	194.85
26	1558.17	192.40	76	1538.19	194.90
27	1557.77	192.45	77	1537.79	194.95
28	1557.36	192.50	78	1537.40	195.00
29	1556.96	192.55	79	1537.00	195.05
30	1556.55	192.60	80	1536.61	195.10
31	1556.15	192.65	81	1536.22	195.15
32	1555.75	192.70	82	1535.82	195.20
33	1555.34	192.75	83	1535.43	195.25

Channel	Wavelength (nm)	Frequency (THz)	Channel	Wavelength (nm)	Frequency (THz)
34	1554.94	192.80	84	1535.04	195.30
35	1554.54	192.85	85	1534.64	195.35
36	1554.13	192.90	86	1534.25	195.40
37	1553.73	192.95	87	1533.86	195.45
38	1553.33	193.00	88	1533.47	195.50
39	1552.93	193.05	89	1533.07	195.55
40	1552.52	193.10	90	1532.68	195.60
41	1552.12	193.15	91	1532.29	195.65
42	1551.72	193.20	92	1531.90	195.70
43	1551.32	193.25	93	1531.51	195.75
44	1550.92	193.30	94	1531.12	195.80
45	1550.52	193.35	95	1530.72	195.85
46	1550.12	193.40	96	1530.33	195.90
47	1549.72	193.45	97	1529.94	195.95
48	1549.32	193.50	98	1529.55	196.00
49	1548.91	193.55	99	1529.16	196.05
50	1548.51	193.60			

Note:

1. When a tunable module is plugged in for the first time, it will go to a default channel, SFPP-LP-T99R-80 default channel is 1568.36 nm, compatible with channel range from 1 to 99
2. When the module is power cycled it will automatically go to the last channel selected, or when Tx_Disable asserted and then re-enabled, the module returns to the last channel selected.

Specifications

Absolute Maximum Ratings

Parameter	Symbol	Min.	Typ.	Max.	Unit	Note
Storage Temperature	Ts	-40	-	85	°C	
Relative Humidity	RH	5	-	85	%	
Power Supply Voltage	VCC	-0.3	-	3.6	V	
Signal Input Voltage		Vcc-0.3	-	Vcc+0.3	V	

Recommended Operating Conditions

Parameter	Symbol	Min.	Typ.	Max.	Unit	Note
Case Operating Temperature	Tcase	-5	-	70	°C	Without air flow
Power Supply Voltage	VCC	3.14	3.3	3.47	V	
Power Supply Current	ICC	-		500	mA	
Data Rate	BR		10.3125		Gbps	
Transmission Distance	TD		-	80	km	
Coupled fiber	Single-mode fiber					9/125 µm SMF

Optical Characteristics

Parameter	Symbol	Min	Typ	Max	Unit	Note
Transmitter						
Average Optical Power	Pout	-1		3	dBm	1
Frequency Stability (BOL)		fc-1.5		fc+1.5	GHz	2
Frequency Stability (EOL)		fc-2.5		fc+2.5	GHz	2
Center Wavelength Spacing			50		GHz	3
Optical Extinction Ratio	ER	8.2			dB	
Side mode Suppression ratio	SMSR	35			dB	
Average Launch Power (Laser off)	Poff			-30	dBm	
Output Eye Mask	Compliant with IEEE 802.3ae					
Receiver						
Rx Sensitivity with Dispersion 0 ps/nm	R_{SENS}			-23	dBm	@9.95, 10.3, 10.5 Gbps, BER=10^-12
				-27		@10.709 Gbps, BER=10^-4
				-27		@11.1 Gbps, BER=10^-4
				-26.5		@11.3 Gbps, BER=10^-4
Rx Sensitivity with Dispersion –400 ps/nm to +1450 ps/nm				-21		@9.95, 10.3, 10.5 Gbps, BER=10^-12
				-25		@10.709 Gbps, BER=10^-4
				-25		@11.1 Gbps, BER=10^-4
				-24		@11.3 Gbps, BER=10^-4
Input Saturation Power (Overload)	Psat	-6			dBm	
Wavelength Range	λC	1480		1580	nm	
LOS De-Assert	LOSD			-27	dBm	
LOS Assert	LOSA	-36			dBm	
LOS Hysteresis		0.5			dB	

Notes:

1. Output power is power coupled into a 9/125 mm single-mode fiber.
2. fc refers to Page 2 the Frequency row of SFPP-LP-T99R-80 Wavelength Guide Table, and test condition is reflect power to transmitter lower than -27 dBm.
3. Corresponds to approximately 0.4 nm.

Electrical Characteristics

Parameter	Symbol	Min	Typ	Max	Unit	Note
Supply Voltage	Vcc	3.14	3.3	3.46	V	
Supply Current	Icc			500	mA	
Transmitter						
Input Differential Impedance	ohm		100		Ω	1
Differential Data Input Swing	Vin, pp	240		910	mV	
Transmit Disable Voltage	Vdis	Vcc-1.3		Vcc	V	
Transmit Enable Voltage	Ven	Vee		Vee+0.8	V	2

TX_FAULT Voltage-High		Vcc-1.3	Vcc	V	
TX_FAULT Voltage-Low		Vee	Vee+0.8	V	
Receiver					
Differential Data Output Swing	Vout, pp	350	800	mV	3
Data Output Rise Time	tr	30		ps	4
Data Output Fall Time	tf	30		ps	4
LOS Fault		Vcc-1.3	Vcc_{HOST}	V	5
LOS Normal		Vee	Vee+0.8	V	5

Notes:

1. Connected directly to TX data input pins. AC coupled thereafter.
2. Or open circuit.
3. Into 100 ohms differential termination.
4. These are unfiltered 20 % to 80 % values
5. Loss Of Signal is LVTTL. Logic 0 indicates normal operation; logic 1 indicates no signal detected.

Timing Parameters

Parameter	Symbol	Min	Typ	Max	Unit	Note
Time to Initialize Cooled Module	Tstart_up			20	s	
Channel Switch Time	TchannelSwitch			200	ms	Any channel to any channel

Ordering Information

Product Name	Product Description
SFPP-LP-T99R-80	SFP+ Plug-in, 10 Gbps, 80 km, TX=ITU Ch 1~99 50 GHz, RX=1480 nm to 1580 nm, LC/PC Blue

Contact Information

Ascent Communication Technology Ltd

AUSTRALIA
140 William Street, Melbourne
Victoria 3000, AUSTRALIA
Phone: +61-3-8691 2902

CHINA
Unit 1933, 600 Luban Road
200023, Shanghai CHINA
Phone: +86-21-60232616

EUROPE
Pfarrer-Bensheimer-Strasse 7a
55129 Mainz, GERMANY
Phone: +49 (0) 6136 926 3246

HONG KONG SAR
Unit 9, 12th Floor, Wing Tuck Commercial Centre
177 Wing Lok Street, Sheung Wan, HONG KONG
Phone: +852-2851 4722

USA
2710 Thomes Ave
Cheyenne, WY 82001, USA
Phone: +1-203 816 5188

VIETNAM
15 /F TTC Building, Duy Tan Street
Cau Giay Dist., Hanoi, VIETNAM
Phone: +84 243 795 5917

WEB: www.ascentcomtec.com

EMAIL: sales@ascentcomtec.com

Specifications and product availability are subject to change without notice.

Ver. ACT_SFPP-LP-T99R-80_Datasheet_V1a_Oct_2017