10 Gb/s CWDM SFP+ 80 km Transceiver

SFP+ Series

- **Up to 11.1 Gbps data links**
- **Up to 80 km transmission on SMW**
- **<1.5 W power dissipation**
- **Metal enclosure, for lower EMI**
- **2-wire interface with integrated Digital Diagnostic Monitoring**
- **Hot-pluggable SFP+ footprint**
- **Compliant to SFF-8472**
- **Compliant to SFF-8431**

Ascent's SFPP-ATLP-61-80 SFP+ transceiver is an integrated fiber optic transceiver that provides a high-speed serial link at signaling rates up to 11.1 Gb/s. The Coarse Wavelength Division Multiplexing (CWDM) Small Form Factor Pluggable Plus (SFP+) solution is a convenient and cost-effective solution for the adoption of 10 Gigabit Ethernet in campus, data-center, and metropolitan-area access networks

The module complies with SFF-8431 and SFF-8472 standards. It is suitable for 10G Ethernet applications and has a transmission distance of up to 80 km on single-mode fibers.

The SFPP-ATLP-61-80 transceiver features a metal enclosure for lower EMI. It utilizes a 2-wire interface that is compliant with the serial communication protocol as defined in the SFP+ MSA. It also provides a unique integrated digital diagnostic monitoring interface, allowing for real-time access to device operating parameters. This module is also hot-pluggable.

Key Features

- Up to 11.1 Gbps Data Links
- Up to 80 km transmission on SMF
- Power dissipation < 1.5W
- CWDM EML Laser and APD receiver
- Metal enclosure, for lower EMI
- 2-wire interface with integrated Digital Diagnostic monitoring
- Hot-pluggable SFP+ footprint
- Compliant with SFP+ MSA with LC connector
- Single 3.3V power supply
- Case operating temperature range:0 °C to 70 °C
- Compliant to 802.3ae 10GBASE-ZR/ZW
- Compliant to SFF-8472
- Compliant to SFF-8431
- RoHS compliant

Outline Dimensions

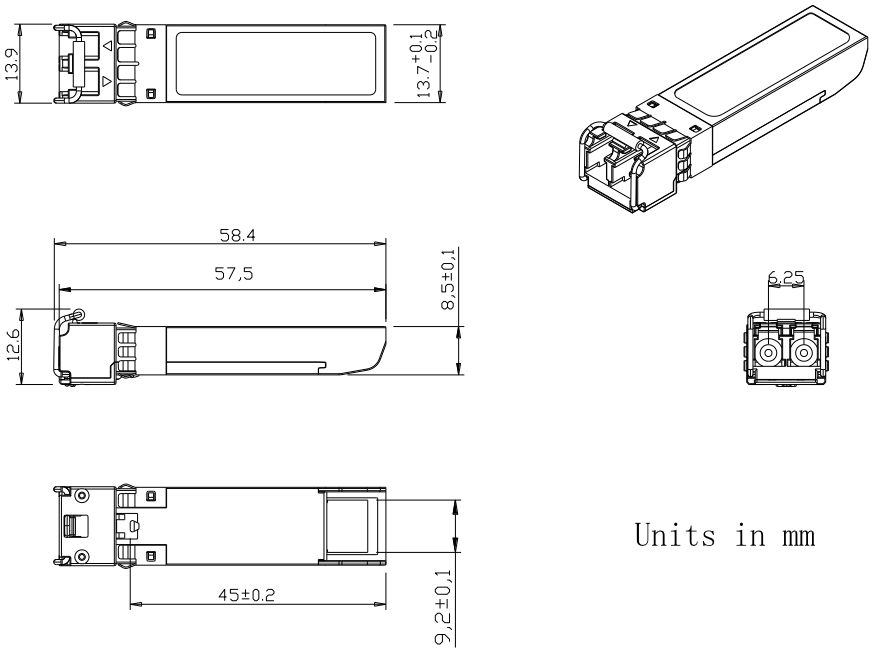

Host – Transceiver Interface Block Diagram

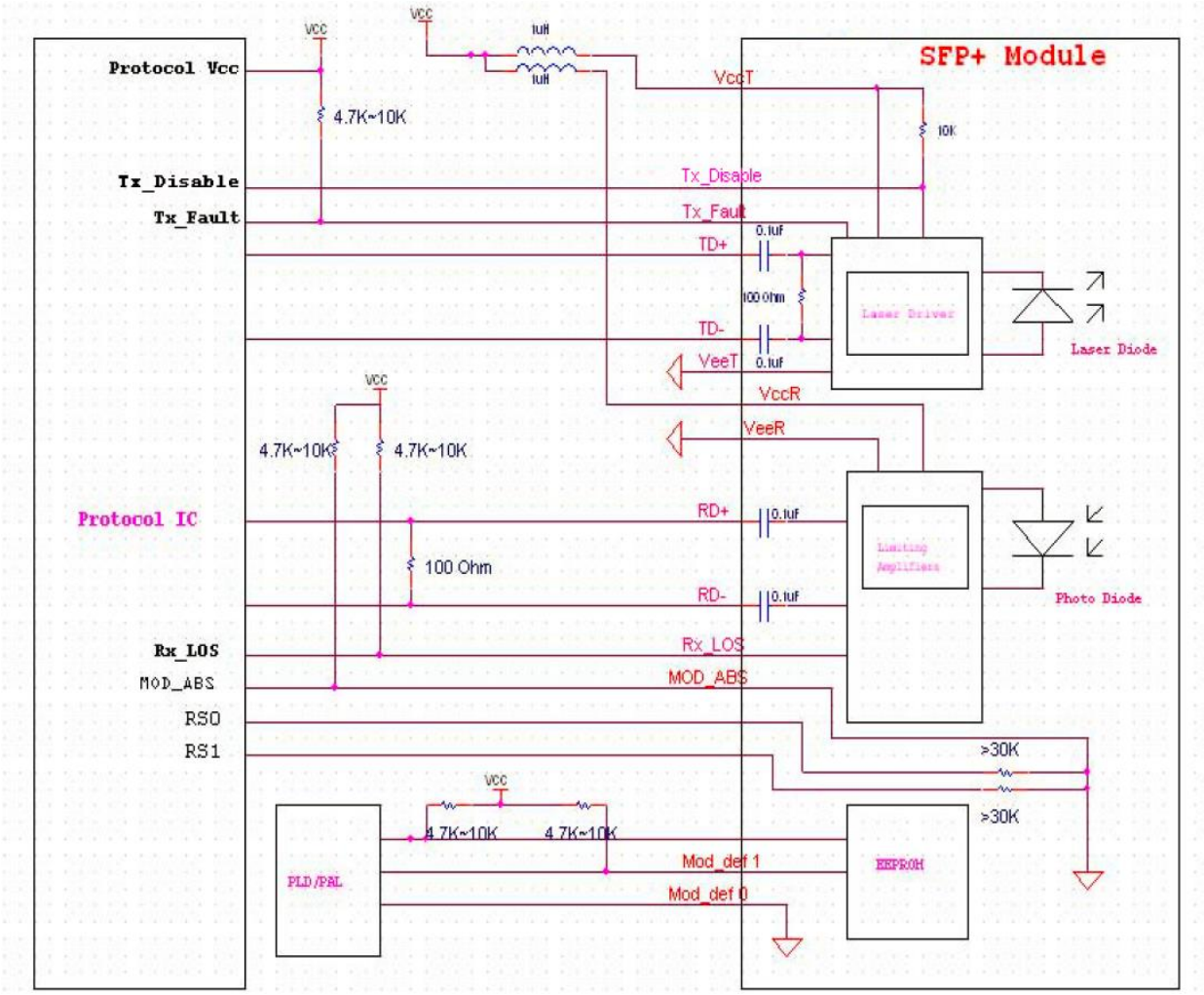

Pin Assignment

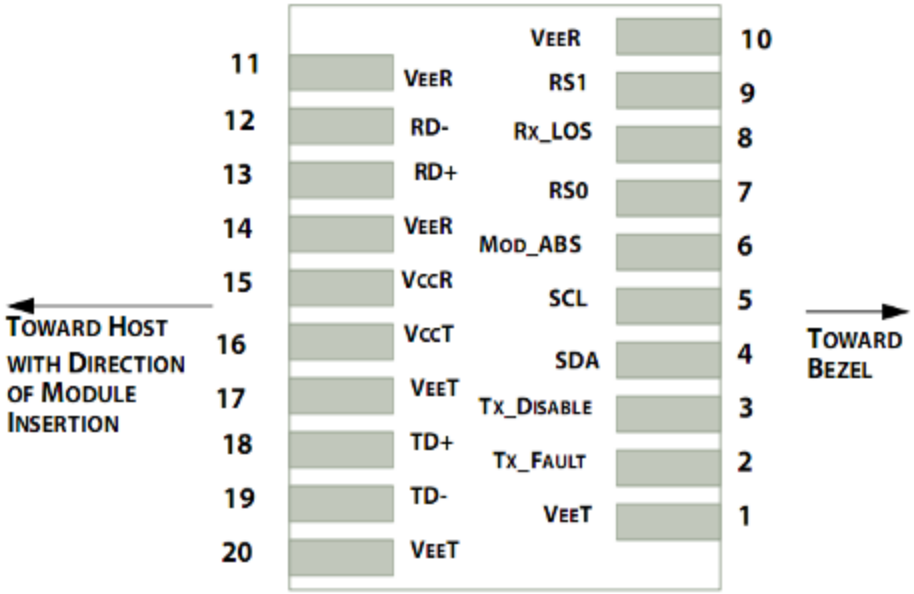

Pin out of Connector Block on Host Board

Pin	Symbol	Name/Description	Note
1	V_{EET}	Transmitter Ground (Common with Receiver Ground)	1
2	T_{FAULT}	Transmitter Fault.	2
3	T_{DIS}	Transmitter Disable. Laser output disabled on high or open.	3
4	SDA	2-wire Serial Interface Data Line	4
5	SCL	2-wire Serial Interface Clock Line	4
6	MOD_ABS	Module Absent. Grounded within the module	4
7	RS0	Rate Select 0	5
8	LOS	Loss of Signal indication. Logic 0 indicates normal operation.	6
9	RS1	No connection required	1
10	V_{EER}	Receiver Ground (Common with Transmitter Ground)	1
11	V_{EER}	Receiver Ground (Common with Transmitter Ground)	1
12	RD-	Receiver Inverted DATA out. AC Coupled	
13	RD+	Receiver Non-inverted DATA out. AC Coupled	
14	V_{EER}	Receiver Ground (Common with Transmitter Ground)	1
15	V_{CCR}	Receiver Power Supply	
16	V_{CCT}	Transmitter Power Supply	
17	V_{EET}	Transmitter Ground (Common with Receiver Ground)	1
18	TD+	Transmitter Non-Inverted DATA in. AC Coupled.	
19	TD-	Transmitter Inverted DATA in. AC Coupled.	
20	V_{EET}	Transmitter Ground (Common with Receiver Ground)	1

Notes:

1. Circuit ground is internally isolated from chassis ground.

2. T_{FAULT} is an open collector/drain output, which should be pulled up with a 4.7 kΩ to 10 kΩ resistor on the host board if intended for use. Pull up voltage should be between 2.0 V to Vcc + 0.3 V. A high output indicates a transmitter fault caused by either the TX bias current or the TX output power exceeding the preset alarm thresholds. A low output indicates normal operation. In the low state, the output is pulled to <0.8V.
3. Laser output disabled on T_{DIS} > 2.0 V or open, enabled on T_{DIS} < 0.8 V.
4. Should be pulled up with 4.7 kΩ to 10 kΩ host board to a voltage between 2.0 V and 3.6 V. MOD_ABS pulls line low to indicate module is plugged in.
5. Internally pulled down per SFF-8431 Rev 4.1.
6. LOS is an open collector output. It should be pulled up with 4.7 kΩ to 10 kΩ on the host board to a voltage between 2.0 V and 3.6 V. Logic 0 indicates normal operation; logic 1 indicates loss of signal.

Specifications

Absolute Maximum Ratings

Parameter	Symbol	Min.	Typ.	Max.	Unit	Notes
Storage Temperature	Ts	-40	-	85	°C	
Relative Humidity	RH	5	-	95	%	
Power Supply Voltage	VCC	-0.3	-	4	V	
Signal Input Voltage		Vcc-0.3	-	Vcc+0.3	V	

Recommended Operating Conditions

Parameter	Symbol	Min.	Typ.	Max.	Unit	Notes
Case Operating Temperature	Tcase	0	-	70	°C	Without air flow
Power Supply Voltage	VCC	3.14	3.3	3.47	V	
Power Supply Current	ICC	-		450	mA	
Data Rate	BR		10.3125		Gbps	
Transmission Distance	TD		-	80	km	
Coupled fiber	Single-mode fiber					9/125 µm SMF

Optical Characteristics

Parameter	Symbol	Min.	Typ.	Max.	Unit	Notes
Transmitter						
Output Optical Power	P_{OUT}	0		4	dBm	1
Optical Wavelength	λ	λ-6.5		λ+6.5	nm	2
Spectral Width (-20 dB)	σ			1	nm	
Optical Extinction Ratio	ER	6			dB	
Transmitter and Dispersion Penalty	TDP			3	dB	
Side mode Suppression ratio	SMSR	30			dB	
Output Eye Mask		Compliant with IEEE 802.3ae				
Receiver						
Receiver Sensitivity	Psen			-23	dBm	3
Input Saturation Power (Overload)	PSAT	-6			dBm	
Input Optical Wavelength	λ_{IN}	1270		1610	nm	

LOS - Assert Power	PA		-26	dBm
LOS - De-assert Power	PD	-32		dBm
LOS - Hysteresis	PHys	0.5		dB

Notes:

1. Class 1 Laser Safety per FDA/CDRH and IEC-825-1 regulations.
2. λ is: 1470, 1490, 1510, 1530, 1550, 1570, 1590, 1610, please the "product selection".
3. Measured with a PRBS 231-1 test pattern, @10.325Gb/s, BER<10^{-12}.

Electrical Characteristics

Parameter	Symbol	Min.	Typ.	Max.	Unit	Notes
Supply Voltage	Vcc	3.14	3.3	3.46	V	
Supply Current	Icc			450	mA	
Transmitter						
Input Differential Impedance	Rin		100		Ω	1
Differential Data Input Swing	Vin, pp	180		1200	mV	
Transmit Disable Voltage	VD	Vcc–1.3		Vcc	V	
Transmit Enable Voltage	VEN	Vee		Vee+ 0.8	V	2
Transmit Disable Assert Time				10	us	
Receiver						
Differential Data Output Swing	Vout, pp	300		850	mV	3
Data Output Rise Time	tr	30			ps	4
Data Output Fall Time	tf	30			ps	4
LOS Fault	VLOS fault	Vcc–1.3		VccHOST	V	5
LOS Normal	VLOS norm	Vee		Vee+0.8	V	5
Power Supply Rejection	PSR	100			mVpp	6

Notes:

1. Connected directly to TX data input pins. AC coupled thereafter.
2. Or open circuit.
3. Input 100 ohms differential termination.
4. These are unfiltered 20-80 % values
5. Loss Of Signal is LVTTL. Logic 0 indicates normal operation; logic 1 indicates no signal detected.
6. Receiver sensitivity is compliant with power supply sinusoidal modulation of 20 Hz to 1.5 MHz up to specified value applied through the recommended power supply filtering network.

Digital Diagnostic Functions

ASCENT SFPP-ATLP-61-80 transceivers support the 2-wire serial communication protocol as defined in the SFP+ MSA.

The standard SFP serial ID provides access to identification information that describes the transceiver's capabilities, standard interfaces, manufacturer, and other information.

Additionally, ASCENT SFP+ transceivers provide a unique enhanced digital diagnostic monitoring interface which allows real-time access to device operating parameters such as transceiver temperature, laser bias current, transmitted optical power, received optical power, and transceiver supply voltage. It also defines a sophisticated system of alarm and warning flags which alerts end users when particular operating parameters are outside of a factory set normal range.

The SFP+ MSA defines a 256-byte memory map in EEPROM that is accessible over a 2-wire serial interface at the 8-bit address 1010000X (A0h). The digital diagnostic monitoring interface makes use of the 8-bit address 1010001X (A2h), so the originally defined serial ID memory map remains unchanged.

The operating and diagnostics information is monitored and reported by a Digital Diagnostics Transceiver Controller (DDTC) inside the transceiver, which is accessed through a 2-wire serial interface. When the serial protocol is activated, the serial clock signal (SCL, Mod Def 1) is generated by the host. The positive edge clocks data into the SFP transceiver into those segments of the E2PROM that are not write-protected. The negative edge clocks data from the SFP transceiver. The serial data signal (SDA, Mod Def 2) is bi-directional for serial data transfer. The host uses SDA in conjunction with SCL to mark the start and end of serial protocol activation. The memories are organized as a series of 8-bit data words that can be addressed individually or sequentially.

Ordering Information

Product Name	Product Description
SFPP-ATLP-61-80	SFP+ Plug-in, 10Gbps, 80km, TX=1610/RX wide, on two single mode fibers, LC/PC Blue
SFPP-AT-LP-xx-80	SFP+ Plug-in, 10Gbps, 80km, TX=1xx0/RX wide, on two single mode fibers, LC/PC Blue

Contact Information

Ascent Communication Technology Ltd

AUSTRALIA
140 William Street, Melbourne
Victoria 3000, AUSTRALIA
Phone: +61-3-8691 2902

CHINA
Unit 1933, 600 Luban Road
200023, Shanghai CHINA
Phone: +86-21-60232616

EUROPE
Pfarrer-Bensheimer-Strasse 7a
55129 Mainz, GERMANY
Phone: +49 (0) 6136 926 3246

HONG KONG SAR
Unit 9, 12th Floor, Wing Tuck Commercial Centre
177 Wing Lok Street, Sheung Wan, HONG KONG
Phone: +852-2851 4722

USA
2710 Thomes Ave
Cheyenne, WY 82001, USA
Phone: +1-203 816 5188

VIETNAM
15 /F TTC Building, Duy Tan Street
Cau Giay Dist., Hanoi, VIETNAM
Phone: +84 243 795 5917

WEB: www.ascentcomtec.com

EMAIL: sales@ascentcomtec.com

Specifications and product availability are subject to change without notice.

Ver. ACT_SFPP-ATLP-61-80_Datasheet_V1b_May_2019