SFP BIDI 1.25G 1310/1490 nm 20 km DDM

SFP Transceiver Series

- Up to 1.25 Gb/s data links
- DFB laser transmitter
- PIN photodetector
- Up to 20 km on 9/125 µm SMF
- Hot-pluggable SFP footprint
- BIDI LC/UPC type pluggable optical interface
- Low power dissipation
- Metal enclosure for lower EMI
- RoHS compliant and lead-free
- Supports the Digital Diagnostic Monitoring interface
- Compliant with SFF-8472

ACT's SFP-AG-SP-4931 transceiver is a flexible solution as an interface for switches, routers, servers, and other optical links. This SFP transceiver can carry data links at rates up to 1.25 Gb/s, and is compatible with the SFP Multi-Sourcing Agreement (MSA). The transceiver module covers data link up to 20KM in 9/125um single mode fiber. It is BIDI with the 1310nm FP laser and the 1550nm DFB laser.

The optical output of the transceiver can be disabled by a high-level TTL TX disable input, and the module can also be disabled via I2C. TX fault is provided to indicate any degradation of the laser. A loss of signal (LOS) output is provided to indicate if there is any loss in the receiver input optical signal or if there are any problems with the link status of partner devices. The system can obtain the LOS /link /disable /fault information using an I2C register access.

Key Features

- Up to 1.25 Gb/s data links
- DFB laser transmitter
- PIN photodetector
- Up to 20 km on 9/125µm SMF
- Hot-pluggable SFP footprint
- BIDI LC/UPC type pluggable optical interface
- Low power dissipation
- Metal enclosure for lower EMI
- RoHS compliant and lead-free
- Supports the Digital Diagnostic Monitoring interface
- Compliant with SFF-8472

Outline Diagram

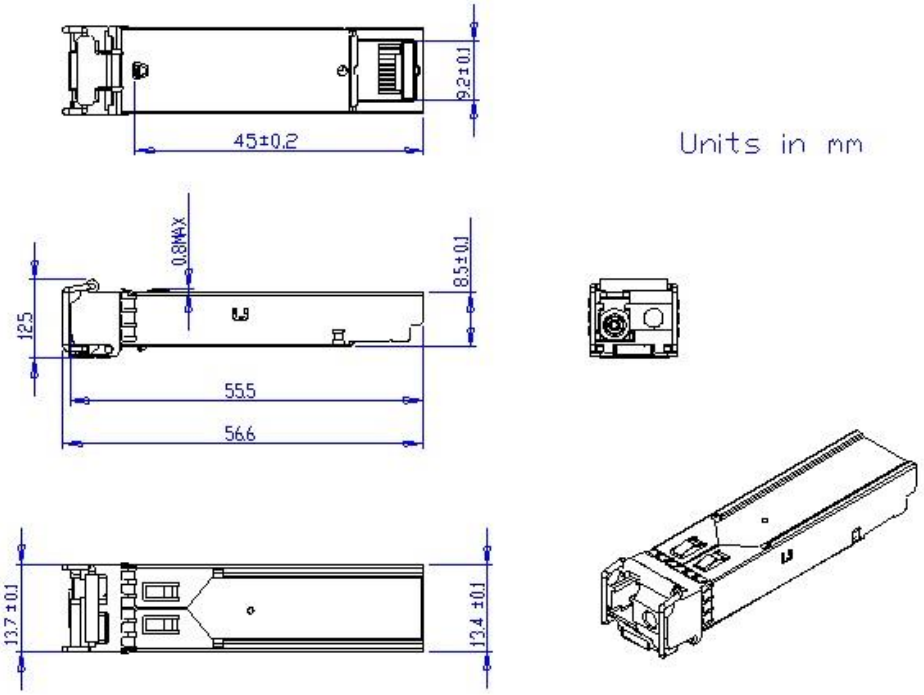

SFP-AP-LP-4931-40D

Recommended Circuit Schematic

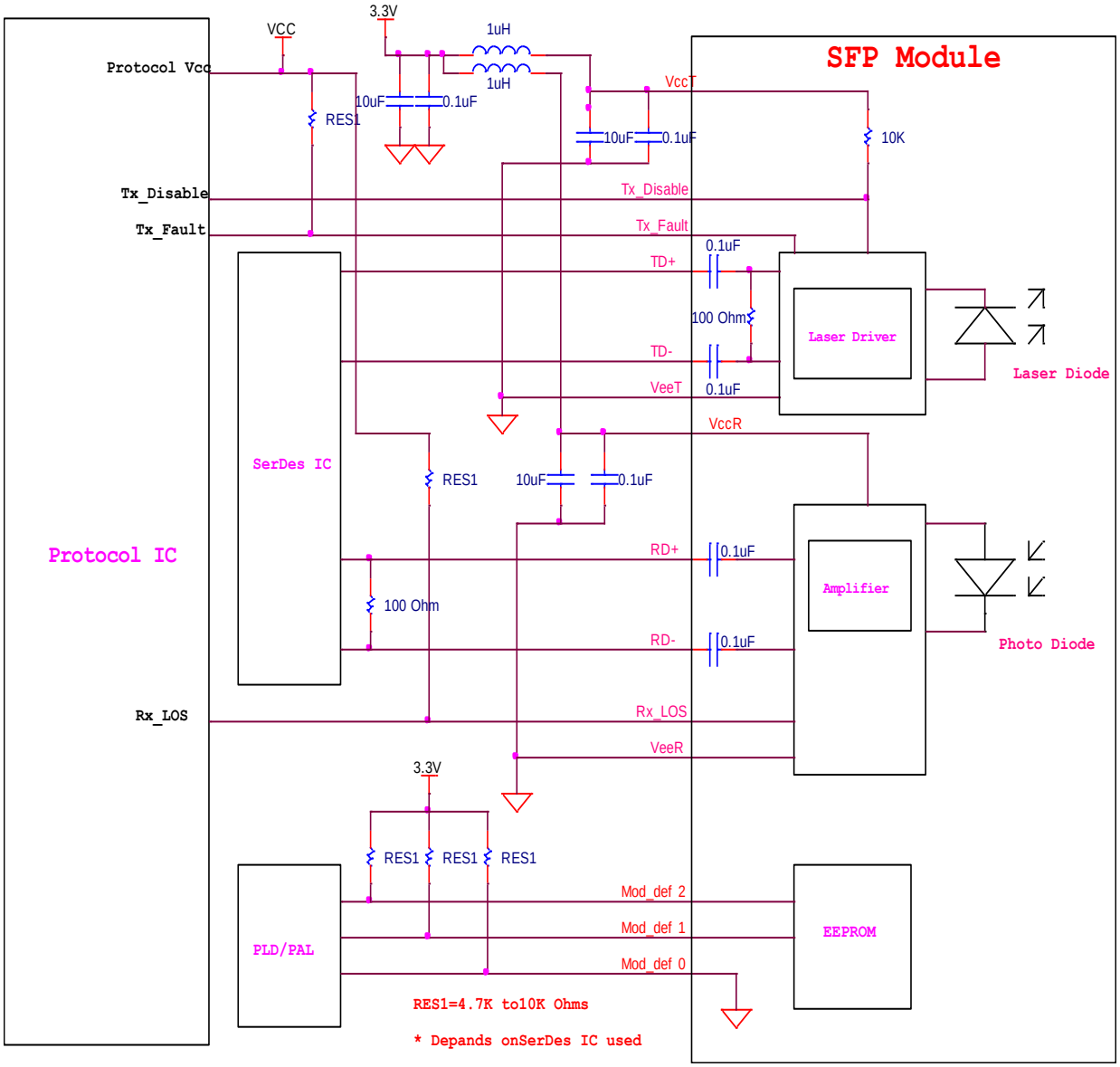

Pin Descriptions

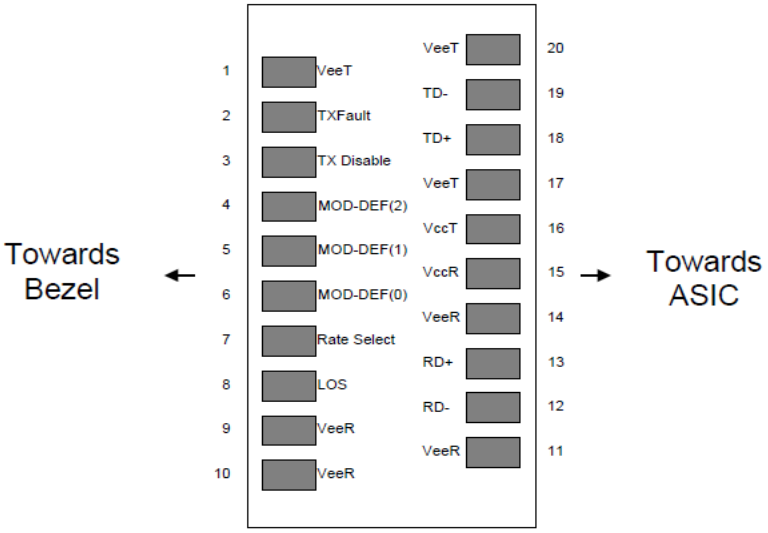

Pin-out of Connector Block on Host Board

Pin	Symbol	Name/Description	Note
1	VEET	Transmitter Ground (Common with Receiver Ground)	1
2	TFAULT	Transmitter Fault. Not supported.	-
3	TDIS	Transmitter Disable. Laser output disabled on high or open.	2
4	MOD_DEF(2)	Module Definition 2. Data line for Serial ID.	3
5	MOD_DEF(1)	Module Definition 1. Clock line for Serial ID.	3
6	MOD_DEF(0)	Module Definition 0. Grounded within the module.	3
7	Rate Select	No connection required.	4
8	LOS	Loss of Signal indicator. Logic 0 indicates normal operation.	5
9	VEER	Receiver Ground (Common with Transmitter Ground)	1
10	VEER	Receiver Ground (Common with Transmitter Ground)	1
11	VEER	Receiver Ground (Common with Transmitter Ground)	1
12	RD-	Receiver Inverted DATA out. AC Coupled.	-
13	RD+	Receiver Non-inverted DATA out. AC Coupled.	-
14	VEER	Receiver Ground (Common with Transmitter Ground).	1
15	VCCR	Receiver Power Supply	-
16	VCCT	Transmitter Power Supply	-
17	VEET	Transmitter Ground (Common with Receiver Ground)	1
18	TD+	Transmitter Non-Inverted DATA in. AC Coupled.	-
19	TD-	Transmitter Inverted DATA in. AC Coupled.	-
20	VEET	Transmitter Ground (Common with Receiver Ground)	1

Notes:

1. Circuit ground is internally isolated from chassis ground.
2. Laser output disabled on T_{DIS} >2.0V or open, enabled on T_{DIS} <0.8V.
3. Module definition pins should be pulled up with 4.7 ~ 10 kΩ resistors on the host board to a voltage between

2.0V and 3.6V. MOD_DEF(0) pulls the line low to indicate that the module is plugged in.

4. This is an optional input used to control the receiver bandwidth for compatibility with multiple data rates (most likely Fiber Channel 1x and 2x rates). If implemented, the input will be internally pulled down with a > 30kΩ resistor. The input states are:

Low (0 – 0.8V):	Reduced Bandwidth
(>0.8V, < 2.0V):	Undefined
High (2.0 – 3.465V):	Full Bandwidth
Open:	Reduced Bandwidth

5. The LOS pin is for open collector output. It should be pulled up with a 4.7 ~ 10 kΩ resistor on the host board to a voltage between 2.0V and 3.6V. Logic 0 indicates normal operation; logic 1 indicates loss of signal.

Regulatory Compliance

Feature	Reference	Performance
Electrostatic Discharge (ESD)	IEC/EN 61000-4-2	Compatible with standards
Electromagnetic Interference (EMI)	FCC Part 15 Class B EN 55022 Class B (CISPR 22A)	Compatible with standards
Laser Eye Safety	FDA 21CFR 1040.10, 1040.11 IEC/EN 60825-1, 2	Class 1 laser product
Component Recognition	IEC/EN 60950, UL	Compatible with standards
ROHS	2002/95/EC	Compatible with standards
EMC	EN61000-3	Compatible with standards

Specifications

Absolute Maximum Ratings

Parameter	Symbol	Min.	Typ.	Max.	Unit	Note
Storage Temperature	Ts	-40		85	°C	
Relative Humidity	RH	5		95	%	
Power Supply Voltage	VCC	-0.5		4	V	
Signal Input Voltage		-0.3		Vcc+0.3	V	
Receiver Damage Threshold		5			dBm	

Recommended Operating Conditions

Parameter	Symbol	Min.	Typ.	Max.	Unit	Note
Case Operating Temperature	Tcase	0		70	°C	SFP-AG-SP-4931
		-10		80		SFP-AG-SP-4931E
		-40		85		SFP-AG-SP-4931A
Power Supply Voltage	VCC	3.13	3.3	3.47	V	
Power Supply Current	ICC			280	mA	
Power Supply Noise Rejection				100	mVp-p	100 Hz to 1 MHz
Data Rate			1.25/1.25		Gbps	TX Rate/RX Rate
Transmission Distance				20	kM	
Coupled Fiber	Single-mode fiber					9/125 µm SMF

Transmitter Specifications

Parameter	Symbol	Min.	Typ.	Max.	Unit	Note
Average Output Power	POUT	-9		-3	dBm	1
Extinction Ratio	ER	9			dB	
Center Wavelength	λC	1290	1310	1330	nm	SFP-AG-SP-4931
		1470	1490	1510		SFP-AG-SP-3149
Side Mode Suppression Ratio	SMSR	30			dB	DFB Laser

Spectrum Bandwidth(-20dB)	σ			1	nm	
Transmitter OFF Output Power	POff			-45	dBm	
Differential Line Input Impedance	RIN	90	100	110	Ω	
Output Eye Mask	Compliant with IEEE802.3 z (class 1 laser safety)					2

Notes:

1. Measured at a 2^7-1 NRZ PRBS pattern
2. Transmitter eye mask definition

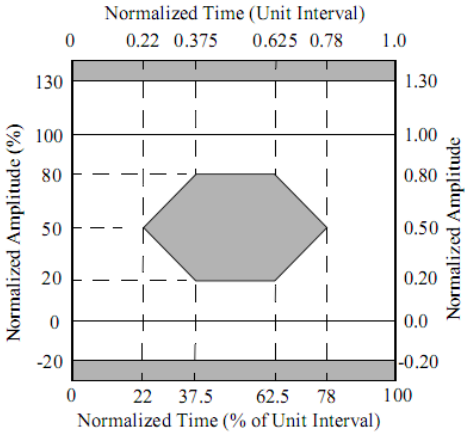

Receiver Specifications

Parameter	Symbol	Min.	Typ.	Max.	Unit	Note
Input Optical Wavelength	λIN	1470	1490	1510	nm	SFP-AG-SP-4931
		1290	1310	1330		SFP-AG-LP-3149
Receiver Sensitivity	PIN			-20	dBm	1
Input Saturation Power (Overload)	PSAT	-3			dBm	
Loss Of Signal Assert	PA	-35			dBm	
Loss Of Signal De-assert	PD			-22	dBm	2
LOS Hysteresis	PA-PD	0.5	2	6	dB	

Notes

1: Measured with light source: 1490 nm (1310 nm), ER=9dB; BER =<10^-12 @PRBS=2^7-1 NRZ.
2: When the LOS is de-asserted, the RX data+/- output is the signal output.

Electrical Interface Characteristics

Parameter	**Symbol**	**Min.**	**Typ.**	**Max.**	**Unit**	**Note**
Transmitter						
Total Supply Current	ICC			A	mA	1
Transmitter Disable Input-High	VDISH	2		Vcc+0.3	V	
Transmitter Disable Input-Low	VDISL	0		0.8	V	
Transmitter Fault Input-High	VTxFH	2		Vcc+0.3	V	

Transmitter Fault Input-Low	VTxFL	0	0.8	V	
Receiver					
Total Supply Current	ICC		B	mA	1
LOSS Output Voltage-High	VLOSH	2	Vcc+0.3	V	LVTTL
LOSS Output Voltage-Low	VLOSL	0	0.8	V	

Note:

1: A (TX) + B (RX) = 280 mA (Not including termination circuit)

Digital Diagnostic Functions

ACT SFP transceivers support the 2-wire serial communication protocol as defined in the SFP MSA. It is very closely related to the E2PROM defined in the GBIC standard, with the same electrical specifications.

The standard SFP serial ID provides access to identification information that describes the transceiver's capabilities, standard interfaces, manufacturer, and other information.

Additionally, ACT SFP transceivers provide a unique enhanced digital diagnostic monitoring interface, which allows real-time access to device operating parameters such as transceiver temperature, laser bias current, transmitted optical power, received optical power, and transceiver supply voltage. It also defines a sophisticated system of alarm and warning flags, which alerts end users when particular operating parameters are outside of a factory set normal range.

The SFP MSA defines a 256-byte memory map in E2PROM that is accessible over a 2-wire serial interface at the 8 bit address 1010000X (A0h). The digital diagnostic monitoring interface makes use of the 8 bit address 1010001X (A2h), so the originally defined serial ID memory map remains unchanged. The interface is identical to and thus fully backward compatible with both GBIC specifications and the SFP MSA.

The operating and diagnostics information is monitored and reported by a Digital Diagnostics Transceiver Controller (DDTC) inside the transceiver, which is accessed through a 2-wire serial interface. When the serial protocol is activated, the serial clock signal (SCL, Mod Def 1) is generated by the host. The positive edge clocks data into segments of the E2PROM that are not write-protected within the SFP transceiver. The negative edge clocks data from the SFP transceiver. The serial data signal (SDA, Mod Def 2) is bi-directional for serial data transfer. The host uses SDA in conjunction with SCL to mark the start and end of serial protocol activation. The memories are organized as a series of 8-bit data words that can be addressed individually or sequentially.

Digital diagnostics for the ACT SFP transceivers are internally calibrated by default.

Ordering Information

Product Part Number	Data Rate	Media	Wavelength (nm)	Transmission	Temperature Range

	(Gbps)			Distance (km)	(Tcase) (°C)	
SFP-AG-SP-4931-20	1.25	Single-mode fiber	1310/1490(1490/1310)	20	0 to 70	commercial
SFP-AG-SP-4931E-20	1.25	Single-mode fiber	1310/1490(1490/1310)	20	-10 to 80	extended
SFP-AG-SP-4931A-20	1.25	Single-mode fiber	1310/1490(1490/1310)	20	-40 to 85	industrial

Contact Information

Ascent Communication Technology Ltd

AUSTRALIA
140 William Street, Melbourne
Victoria 3000, AUSTRALIA
Phone: +61-3-8691 2902

CHINA
Unit 1933, 600 Luban Road
200023, Shanghai CHINA
Phone: +86-21-60232616

EUROPE
Pfarrer-Bensheimer-Strasse 7a
55129 Mainz, GERMANY
Phone: +49 (0) 6136 926 3246

HONG KONG SAR
Unit 9, 12th Floor, Wing Tuck Commercial Centre
177 Wing Lok Street, Sheung Wan, HONG KONG
Phone: +852-2851 4722

USA
2710 Thomes Ave
Cheyenne, WY 82001, USA
Phone: +1-203 816 5188

VIETNAM
15 /F TTC Building, Duy Tan Street
Cau Giay Dist., Hanoi, VIETNAM
Phone: +84 243 795 5917

WEB: www.ascentcomtec.com

EMAIL: sales@ascentcomtec.com

Specifications and product availability are subject to change without notice.
Copyright © 2015 Ascent Communication Technology Limited. All rights reserved.
Ver. ACT_SFP-AG-SP-4931-20_Datasheet_V1d_Sep_2015