10/100/1000 BASE-T Copper SFP Transceiver

SFP Series

- Up to 1.25 Gb/s bi-directional data links
- Hot-pluggable SFP footprint
- Low power dissipation (1.05W typical)
- Compact RJ-45 connector assembly
- Fully metal enclosure, for lower EMI
- RoHS compliant and lead-free
- Single +3.3V power supply 10/100/1000 BASE-T operation in host systems with SERDES interface
- 1.25 Gigabit Ethernet over Cat 5 cable

ASCENT'S SFP-AG-CO-03 10/100/1000 BASE-T Copper Small Form Pluggable (SFP) transceivers are based on the SFP Multi Source Agreement (MSA). They are compatible with the Gigabit Ethernet and 1000BASE-T standards as specified in IEEE Std 802.3. The 10/100/1000 BASE-T physical layer IC (PHY) can be accessed via I2C, allowing access to all PHY settings and features.

SFP-AG-CO-03 is compatible with 1000BASE-X auto-negotiation and support a SERDES, but does not have a link indication feature.

Key Features

- Up to 1.25 Gb/s bi-directional data links
- Hot-pluggable SFP footprint
- Low power dissipation (1.05W typical)
- Compact RJ-45 connector assembly
- Fully metal enclosure, for lower EMI
- RoHS compliant and lead-free
- Single +3.3V power supply
- 10/100/1000 BASE-T operation in host systems with SERDES interface
- 1.25 Gigabit Ethernet over Cat 5 cable

Outline Diagram

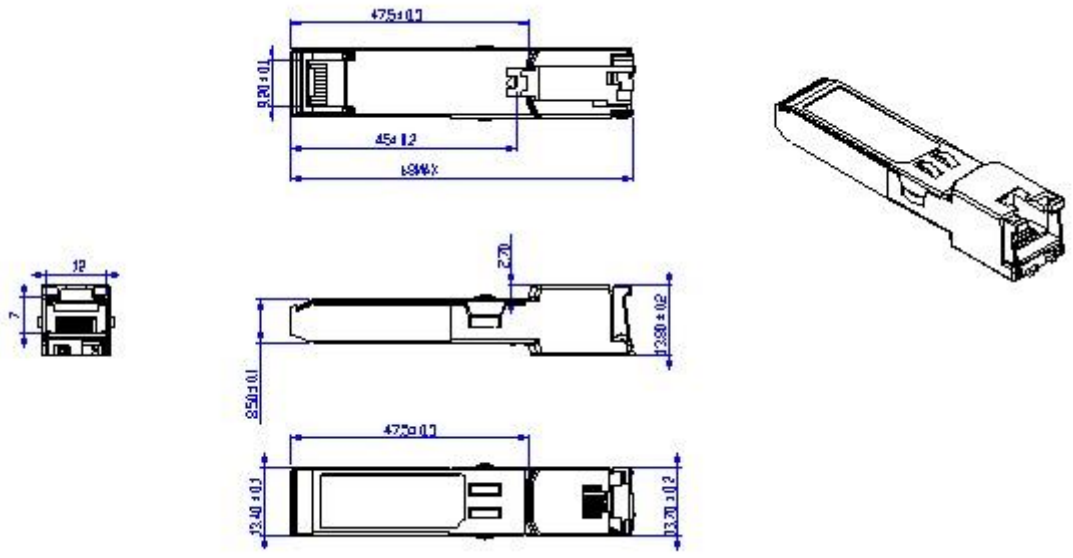

SFP-AG-CO-03

Pin Descriptions

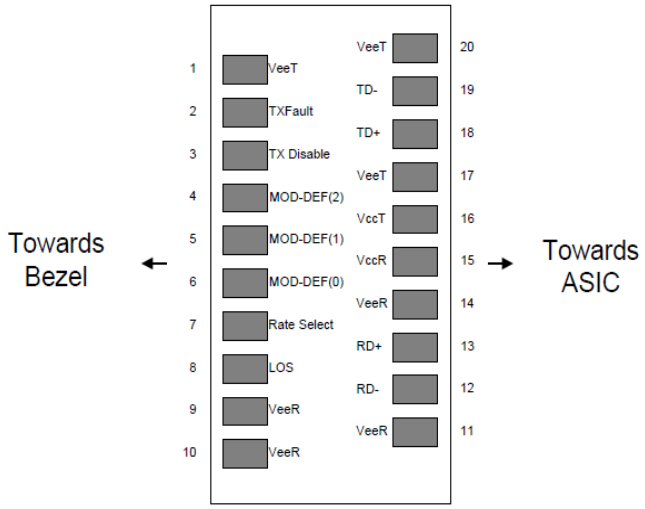

Diagram of host board connector block pin numbers and names

Pin	Symbol	Name/Description	NOTE
1	VEET	Transmitter Ground (Common with Receiver Ground)	1
2	TFAULT	Transmitter Fault. Not supported.	
3	TDIS	Transmitter Disable. Not supported.	
4	MOD_DEF(2)	Module Definition 2. Data line for Serial ID.	2
5	MOD_DEF(1)	Module Definition 1. Clock line for Serial ID.	2
6	MOD_DEF(0)	Module Definition 0. Grounded within the module.	2
7	Rate Select	No connection required	
8	LOS	Loss of Signal indication. Logic 0 indicates normal operation.	3
9	VEER	Receiver Ground (Common with Transmitter Ground)	1
10	VEER	Receiver Ground (Common with Transmitter Ground)	1
11	VEER	Receiver Ground (Common with Transmitter Ground)	1
12	RD-	Receiver Inverted DATA out. AC Coupled	
13	RD+	Receiver Non-inverted DATA out. AC Coupled	
14	VEER	Receiver Ground (Common with Transmitter Ground)	1
15	VCCR	Receiver Power Supply	
16	VCCT	Transmitter Power Supply	
17	VEET	Transmitter Ground (Common with Receiver Ground)	1
18	TD+	Transmitter Non-Inverted DATA in. AC Coupled.	
19	TD-	Transmitter Inverted DATA in. AC Coupled.	
20	VEET	Transmitter Ground (Common with Receiver Ground)	1

Notes:

1. Circuit ground is connected to chassis ground
2. Should be pulled up with 4.7k - 10k Ωs on host board to a voltage between 2.0 V and 3.6 V. MOD_DEF(0) pulls line low to indicate module is plugged in.
3. LVTTL compatible with a maximum voltage of 2.5V.

Specifications

+3.3V Volt Electrical Power Interface

The SFP-AG-CO-03 has an input voltage range of 3.3 V ± 5%. The 4 V maximum voltage is not allowed for continuous operation.

Parameter	Symbol	Min	Typ	Max	Unit	Notes/Conditions
Supply Current	Is		320	375	mA	1.2W max power over full range of voltage and temperature. See caution note below
Input Voltage	Vcc	3.13	3.3	3.47	V	Referenced to GND
Maximum Voltage	Vmax			4	V	
Surge Current	Isurge			30	mA	Hot plug above steady state current. See caution note below

Caution: Power consumption and surge current are higher than the specified values in the SFP MSA

Low-Speed Signals, Electronic Characteristics

MOD_DEF(1) (SCL) and MOD_DEF(2) (SDA), are open drain CMOS signals (see section VII, "Serial Communication Protocol"). Both MOD_DEF(1) and MOD_DEF(2) must be pulled up to host_Vcc

Parameter	Symbol	Min	Max	Unit	Notes/Conditions
SFP Output LOW	VOL	0	0.5	V	4.7k to 10k pull-up to host_Vcc, measured at host side of connector
SFP Output HIGH	VOH	host_Vcc -0.5	host_Vcc + 0.3	V	4.7k to 10k pull-up to host_Vcc, measured at host side of connector
SFP Input LOW	VIL	0	0.8	V	4.7k to 10k pull-up to Vcc, measured at SFP side of connector
SFP Input HIGH	VIH	2	Vcc + 0.3	V	4.7k to 10k pull-up to Vcc, measured at SFP side of connector

High-Speed Electrical Interface, Transmission Line-SFP

All high-speed signals are AC-coupled internally.

Parameter	Symbol	Min	Typ	Max	Unit	Notes/Conditions
Line Frequency	fL		125		MHz	5-level encoding, per IEEE 802.3
Tx Output Impedance	Zout,TX		100		Ω	Differential, for all frequencies between 1MHz and 125MHz
Rx Input Impedance	Zin,RX		100		Ω	Differential, for all frequencies between 1MHz and 125MHz

High-Speed Electrical Interface, Host-SFP

Parameter	Symbol	Min	Typ	Max	Unit	Notes/Conditions

Single-Ended Data Input Swing	Vinsing	250		1200	mV	Single-ended
Single-Ended Data Output Swing	Voutsing	350		800	mV	Single-ended
Rise/Fall Time	T_r,T_f		175		psec	20%-80%
Tx Input Impedance	Zin		50		Ω	Single-ended
Rx Output Impedance	Zout		50		Ω	Single-ended

General Specifications

Parameter	Symbol	Min	Typ	Max	Unit	Notes/Conditions
Data Rate	BR	10		1000	Mb/sec	IEEE 802.3 compatible. See Notes 2 through 4 below
Cable Length	L			100	m	Category 5 UTP.

Notes:

1. Clock tolerance is ± 50 ppm
2. By default, the SFP-AG-CO-03 is a full duplex device in preferred master mode
3. Automatic crossover detection is enabled. External crossover cable is not required
4. SFP-AG-CO-03 does not support SGMII .With a SERDES the module will operate at 10/100/1000 BASE-T

Environmental Specifications

Parameter	Symbol	Min	Typ	Max	Unit	Notes/Conditions
Case Operating	Tcase	0		70	°C	SFP-AG-CO-03
Temperature		-10		80	°C	SFP-AG-CO-03E
		-40		85	°C	SFP-AG-CO-03A
Storage Temperature	Tsto	-40		85	°C	Ambient temperature

Serial Communication Protocol Bus Timing Requirements

SFP-AG-CO-03 support the 2-wire serial communication protocol outlined in the SFP MSA. It uses use an Atmel AT24C02B 256 byte EEPROM with an address of A0h.

Parameter	Symbol	Min	Typ	Max	Unit	Notes/Conditions
I^2C Clock Rate		0		100,000	Hz	

Ordering Information

Product Model	Product Description
SFP-AG-CO-03	SFP Plug-in, 10/100/1000 Base T Copper, 1.25Gbps, 100m, Auto Negotiation, RJ45

Contact Information

Ascent Communication Technology Ltd

AUSTRALIA
140 William Street, Melbourne
Victoria 3000, AUSTRALIA
Phone: +61-3-8691 2902

CHINA
Unit 1933, 600 Luban Road
200023, Shanghai CHINA
Phone: +86-21-60232616

EUROPE
Pfarrer-Bensheimer-Strasse 7a
55129 Mainz, GERMANY
Phone: +49 (0) 6136 926 3246

HONG KONG SAR
Unit 9, 12th Floor, Wing Tuck Commercial Centre
177 Wing Lok Street, Sheung Wan, HONG KONG
Phone: +852-2851 4722

USA
2710 Thomes Ave
Cheyenne, WY 82001, USA
Phone: +1-203 816 5188

VIETNAM
15 /F TTC Building, Duy Tan Street
Cau Giay Dist., Hanoi, VIETNAM
Phone: +84 243 795 5917

WEB: www.ascentcomtec.com

EMAIL: sales@ascentcomtec.com

Specifications and product availability are subject to change without notice.

Ver. ACT_SFP-AG-CO-03_Datasheet_V1c_Feb_2014