DVB-C, T/T2, S/S2 Tuner to IP Gateway

IRD1680 Series

- **DVB-C, DVB-S/S2(950-2150 Mhz), DVB-T/T2 compatible**
- **8 or 14× FTA DVB-S/S2 inputs (DVB-C, T/T2, Optional)**
- **2 × ASI inputs (Optional)**
- **Supports BISS descrambling**
- **Supports DisEqc function**
- **8 or 16 × MPTS or 512 × SPTS outputs**
- **2 × GE mirrored outputs**
- **Web GUI and front panel**
- **Universal management through craft interface**

Ascent's IRD1680 1RU DVB-C, DVB-S/S2, DVB-T/T2 Tuner to IP Gateway offers a flexible, high density (8-in-1, or 14-in-1 or 16-in-1) professional IRD and IPTV gateway with 8 or 14 or 16 Tuner for RF inputs. It supports MPTS and SPTS output switchable. It supports 8 or 16 MPTS or 512 SPTS output over UDP and RTP/RTSP protocol.

IRD1680 IP Gateway is integrated with tuner demodulation (or ASI input) and gateway function, which can demodulate the signal from 14 tuners into IP package, or directly convert the TS from ASI input and tuner into IP package, then output the IP package through different IP address and ports. BISS function is also embedded for tuner input to descramble your tuner input programs.

IRD1680 IP Gateway can be deployed in variety of digital distribution systems. It has intuitive front panel LCD display to make operator's life easier. The IP Gateway is packaged in a self-contained 19" sub-rack of 1 RU with universal mains power supply and SNMP management.

Key Features

- Supports 8 or 14b× FTA DVB-S/S2 (DVB-C/(T/T2)/ISDB-T/ATSC optional) input, 2 × ASI input
- Supports BISS descrambling
- Supports DisEqc function
- 8 or 16 × MPTS or 512 × SPTS outputs (MPTS and SPTS outputs switchable)
- 2 × GE mirrored outputs (IP address and port number of GE1 and GE2 are different), up to 850 Mbps --- SPTS
- 2 independent GE output ports, GE1 + GE2 --- MPTS
- Supports PID filtering, re-mapping (Only for SPTS output)
- Supports "Null PKT Filter" function (Only for MPTS output)
- Supports Web operation

Application Diagram

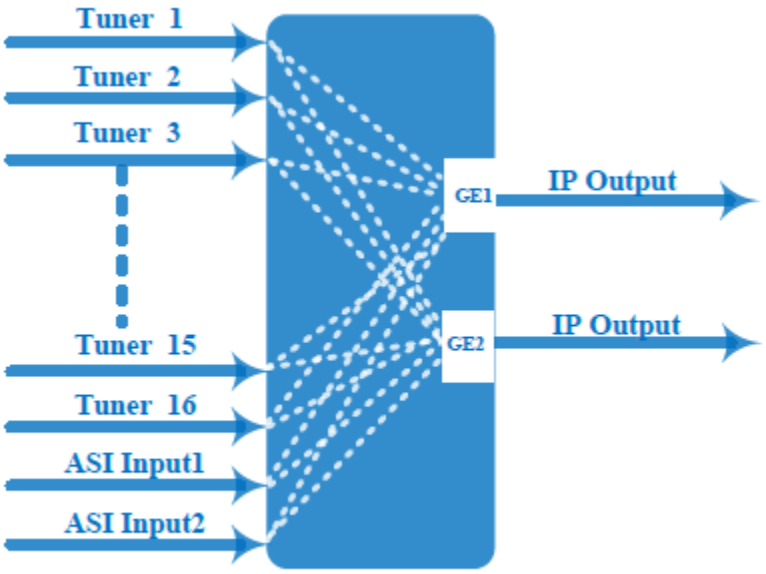

Note: Up to 14 Tuners with 2 ASI inputs, or 16 Tuners without ASI inputs

Specifications

Item	Description
Input	Option 1: 8 tuners input +2 ASI input---SPTS or 8 MPTS output Option 2: 14 tuners input +2 ASI input --- SPTS or 16 MPTS output Option 3: 16 tuners input --- SPTS or 16 MPTS output
Tuner Section	
DVB-C	
Standard	J.83A(DVB-C), J.83B, J.83C
Frequency In	30 MHz to 1000 MHz
Constellation	16/32/64/128/256 QAM
DVB-T/T2	
Frequency In	30 MHz to 999.999 MHz
Bandwidth	6/7/8 M
DVB-S/S2	
Input Frequency	950 MHz to 2150 MHz
Symbol Rate	DVB-S: QPSK 2 Mbauds to 45 Mbauds; DVB-S2: QPSK 1 Mbauds to 45 Mbauds, 8PSK 2 Mbauds to 30 Mbauds
Code Rate	1/2, 3/5, 2/3, 3/4, 4/5, 5/6, 8/9, 9/10
Constellation	QPSK, 8PSK
ISDB-T	
Input Frequency	30 MHz to 1000MHz
ATSC	
Input Frequency	54 MHz to 858 MHz
Bandwidth	6M bandwidth
Output	512 × SPTS IP mirrored output over UDP and RTP/RTSP protocol through GE1 and GE2 port (IP address and port number of GE1 and GE2 are different), Unicast and Multicast 8 or 16 × MPTS IP output (for Tuner/ASI passthrough) over UDP and RTP/RTSP protocol through GE1 and GE2 port, Unicast and Multicast
Biss Descrambling	Mode 1, Mode E (Up to 850 Mbps) (descramble individual program)
General Characteristics	
Dimensions (W × L × H)	482 mm × 410 mm × 44 mm
Approx. Weight	3.6 kg
Operating Temperature	0 °C to +45 °C
Storage Temperature	-20 °C to +80 °C
Power Requirements	100 V_{AC} to 240 V_{AC}, 50/60Hz
Power Consumption	20 W

Ordering Information

Product name	Product description
IRD-16-80-DVB-C-IP-AC	DVB-C Receiver, 8 Tuner and 2 ASI inputs, 8 MPTS or 512 SPTS output over UDP and RTP/RTSP output, AC Power
IRD-16-80-DVB-T-IP-AC	DVB-T/T2 Receiver, 8 Tuner and 2 ASI inputs, 8 MPTS or 512 SPTS output over UDP and RTP/RTSP output, AC Power
IRD-16-80-DVB-S-IP-AC	DVB-S/S2 Receiver, 8 Tuner and 2 ASI inputs, 8 MPTS or 512 SPTS output over UDP and RTP/RTSP output, AC Power
IRD-16-84-DVB-C-IP-AC	DVB-C Receiver, 14 Tuner and 2 ASI inputs, 16 MPTS or 512 SPTS output over UDP and RTP/RTSP output, AC Power
IRD-16-84-DVB-T-IP-AC	DVB-T/T2 Receiver, 14 Tuner and 2 ASI inputs, 16 MPTS or 512 SPTS output over UDP and RTP/RTSP output, AC Power
IRD-16-84-DVB-S-IP-AC	DVB-S/S2 Receiver, 14 Tuner and 2 ASI inputs, 16 MPTS or 512 SPTS output over UDP and RTP/RTSP output, AC Power

Contact Information

Ascent Communication Technology Ltd

AUSTRALIA
140 William Street, Melbourne
Victoria 3000, AUSTRALIA
Phone: +61-3-8691 2902

CHINA
Unit 1933, 600 Luban Road
200023, Shanghai CHINA
Phone: +86-21-60232616

EUROPE
Pfarrer-Bensheimer-Strasse 7a
55129 Mainz, GERMANY
Phone: +49 (0) 6136 926 3246

HONG KONG SAR
Unit 9, 12th Floor, Wing Tuck Commercial Centre
177 Wing Lok Street, Sheung Wan, HONG KONG
Phone: +852-2851 4722

USA
2710 Thomes Ave
Cheyenne, WY 82001, USA
Phone: +1-203 816 5188

VIETNAM
15 /F TTC Building, Duy Tan Street
Cau Giay Dist., Hanoi, VIETNAM
Phone: +84 243 795 5917

WEB: www.ascentcomtec.com

EMAIL: sales@ascentcomtec.com

Specifications and product availability are subject to change without notice.
Copyright © 2016 Ascent Communication Technology Limited. All rights reserved.
Ver. ACT_IRD1680_1RU_Gateway_Datasheet_V1c_Jun_2016