4SAT-IF + 1 Terr. Signal CWDM Optical Receiver

ASR2500 Series

- **Designed for Satellite Optical Systems**
- **Wide operating frequency**
- **Excellent Linearity and flatness**
- **SM fiber high return loss**
- **Build-in GaAs amplifier**
- **Ultra-low noise technology**
- **Build-in CWDM, using high linear PD**
- **LED indicator**
- **Compact size**
- **Easy installation**

Ascent's ASR2500 series is a compact fiber satellite and DTT optical receiver suitable for satellite optical network systems. The device receives the CWDM optical transmission signal from AST2500 transmitter, de-multiplexes them and distributes it to the end customer.

ASR2500 features a wide operating frequency range and excellent linearity and flatness. Using a 1-core single-mode fiber it has high return loss. It has a build-in CWDM, and operates using a high linear PD. ASR2500 also features a built-in optical AGC function.

Ascent offers complete system for distribution over single mode fiber of SAT and DTT programs from single or several satellites. The solution has achieved excellent quality due to using of separated lasers for SAT and DTT content transmitting.

Key Features

- Designed for Satellite Optical Systems
- Wide operating frequency range: 47 MHz to 860 MHz / 950 MHz to 2150 MHz
- Excellent Linearity and flatness
- Single-mode fiber high return loss
- Build-in GaAs amplifier active devices
- Ultralow noise technology
- Build-in CWDM, using high linear PD
- Outputs connected to satellite multiswitch
- Built-in optical AGC function
- Red LED for power indication
- Small size and easy installation

Application Diagram

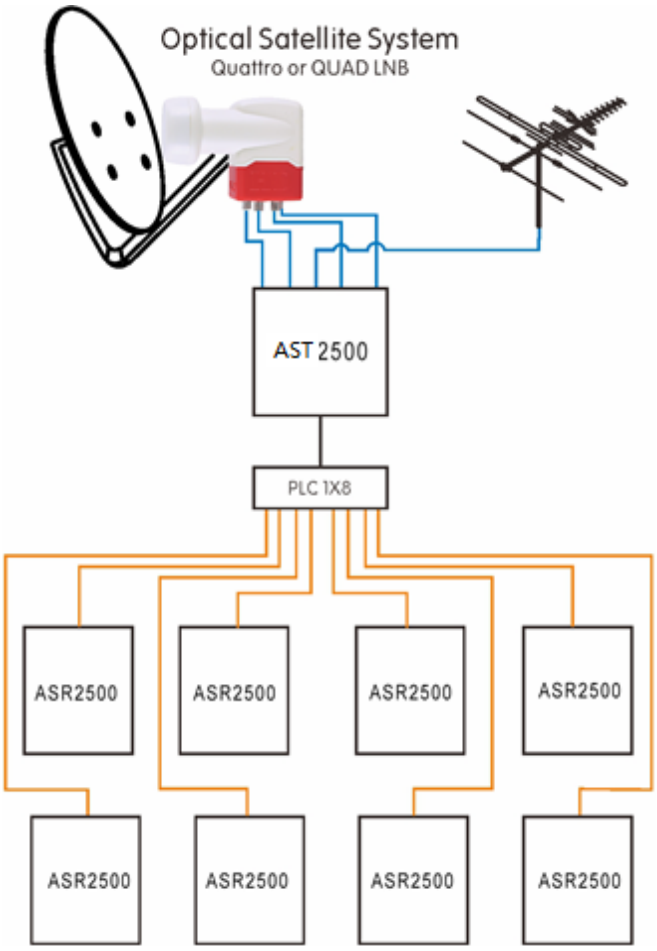

Specifications

Item	Description	Note
Customer Interface		
RF Connector	F-female	
Optical Connector	SC/APC	
Power Supply	F-female	
Optical Parameter		
Optical Return Loss	≥45 dB	
Output Optical Wavelength	1510 nm	LV-RX
	1530 nm	LH-RX
	1550 nm	HV+Terr.-RX
	1570 nm	HH-RX
Responsivity	≥0.9 A/W	
Optical Fiber Type	Single-mode fiber	
Terr.+SAT-IF Parameter		
Input Impedance	75 Ω	
Terr. Frequency Range	47 MHz to 860 MHz	
Terr. Flatness	±0.75 dB	
Terr. Output Level	≥80 dBµV	AGC
Terr. Return Loss	≥14 dB	
CNR	≥50 dB	
CSO	≥62 dB	
CTB	≥65 dB	
SAT-IF Frequency Range	950 MHz to 2150 MHz	
SAT-IF Return Loss	≥10 dB	
SAT-IF Flatness	±1.5 dB	
SAT-IF Output Level	75 dBµV ± 5 dBµV	AGC
AGC Stability	±1 dB	
Other Parameter		
Power Supply	20 V_{DC}	
Power Consumption	<10 W	
Dimensions	195 mm × 128 mm × 40 mm	

Ordering Information

Product Name	Product Description
ASR2500	ASR2500 4SAT-IF + 1 Terr. Signal CWDM Optical Receiver

Contact Information

Ascent Communication Technology Ltd

AUSTRALIA
140 William Street, Melbourne
Victoria 3000, AUSTRALIA
Phone: +61-3-8691 2902

CHINA
Unit 1933, 600 Luban Road
200023, Shanghai CHINA
Phone: +86-21-60232616

EUROPE
Pfarrer-Bensheimer-Strasse 7a
55129 Mainz, GERMANY
Phone: +49 (0) 6136 926 3246

HONG KONG SAR
Unit 9, 12th Floor, Wing Tuck Commercial Centre
177 Wing Lok Street, Sheung Wan, HONG KONG
Phone: +852-2851 4722

USA
2710 Thomes Ave
Cheyenne, WY 82001, USA
Phone: +1-203 816 5188

VIETNAM
15 /F TTC Building, Duy Tan Street
Cau Giay Dist., Hanoi, VIETNAM
Phone: +84 243 795 5917

WEB: www.ascentcomtec.com

EMAIL: sales@ascentcomtec.com

Specifications and product availability are subject to change without notice.
Copyright © 2019 Ascent Communication Technology Limited. All rights reserved.
Ver. ACT_ASR2500_SAT_CWDM_Rx_Datasheet_V1c_Oct_2019