400Gb/S 10km QSFP28 LR4 Transceiver

QSFP Series (OA)

- **Support line rates up to 103.125 Gbps**
- **Digital Diagnostics Monitoring Interface**
- **Duplex LC optical receptacle**
- **No external reference clock**
- **Electrically hot-pluggable**
- **Compliant with QSFP28 MSA with LC connector**
- **Compatible with SONET OC-192, SDH STM-64**
- **Power consumption < 4 W**
- **RoHS compliant**

Ascent's 100G QSFP28 LR4 Optical Transceiver offers service providers, network operators 100 Gigabit Ethernet connectivity options for data center networking, enterprise core aggregation, and service provider transport applications. It integrates receiver and transmitter path on one module.

In the transmit side, four lanes of serial data streams are recovered, retimed, and passed to four laser drivers. The laser drivers control 4 × Distributed Feedback Laser (DFB) with center wavelengths of 1296 nm, 1300 nm.,1304nm, and 1309 nm. The optical signals are multiplexed to a single -mode fiber through an industry standard LC connector . In the receive side , the four lanes of optical data streams are optically de-multiplexed by the integrated optical de-multiplexer . Each data stream is recovered by a PIN photo-detector and trans-impedance amplifier , retimed. This module features a hot-pluggable electrical interface , low power consumption and MDIO management interface.

This product is designed with form factor, optical/electrical connections, and digital diagnostic interface according to the QSFP28 Multi-Source Agreement (MSA) and compliant to IEEE 802.3bm.

Key Features

- Compliant with 100GBASE_LR4
- Support line rates up to 103.125 Gbps
- Integrated LAN WDM TOSA / ROSA for up to 10 km reach over SMF
- Digital Diagnostics Monitoring Interface
- Duplex LC optical receptacle
- No external reference clock
- Electrically hot-pluggable
- Compliant with QSFP28 MSA with LC connector, SONET OC-192, SDH STM-64
- Power consumption < 4 W
- RoHS compliant

Outline Diagram

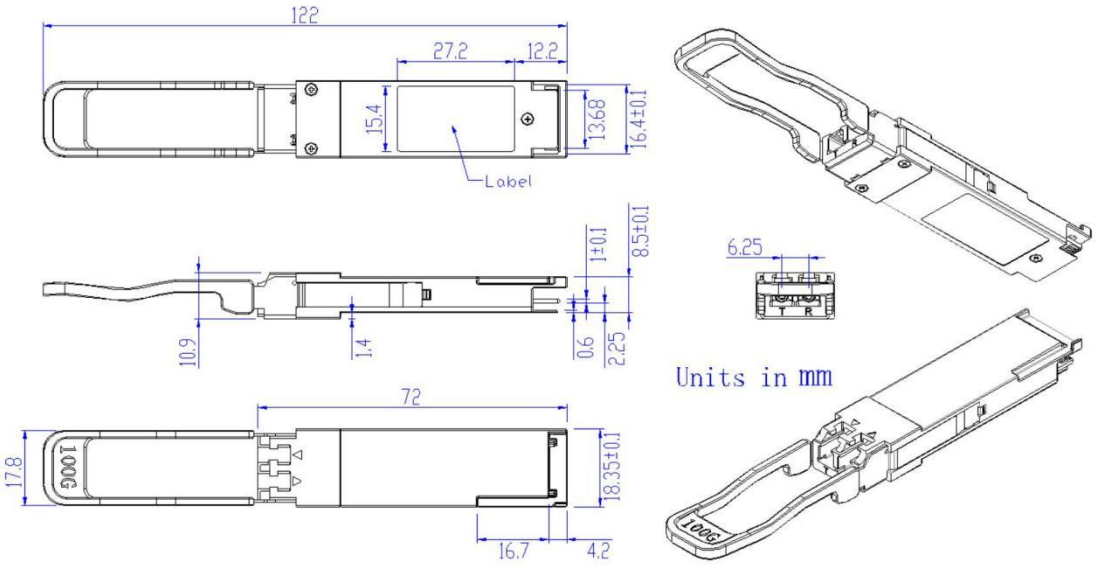

Host – Transceiver Interface Block Diagram

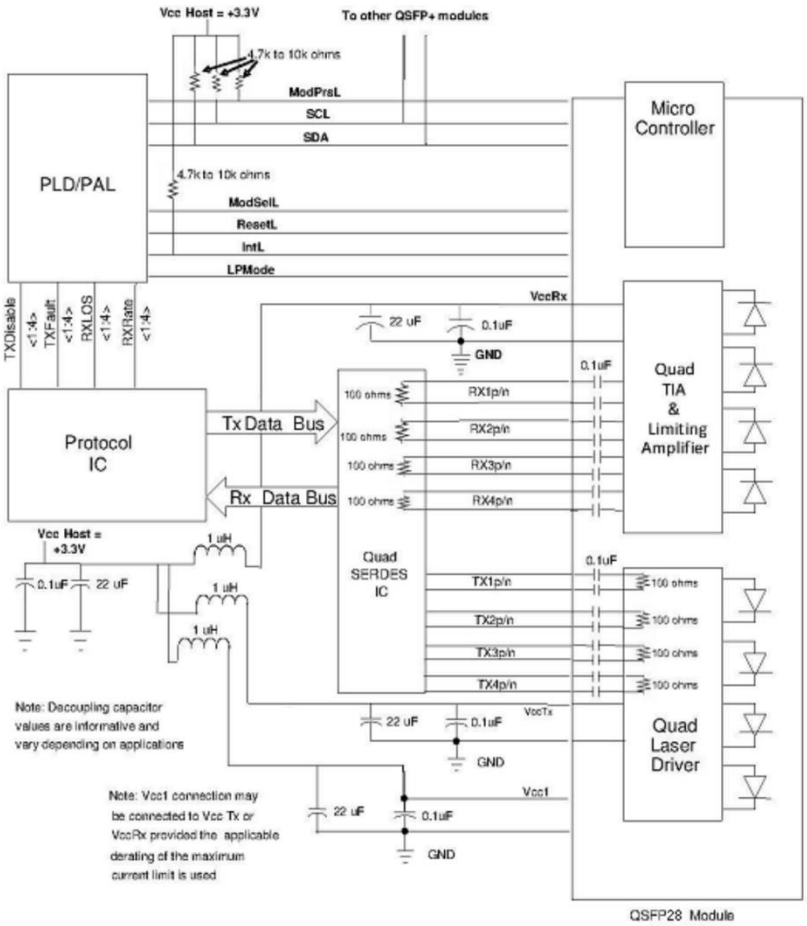

Digital Diagnostic Functions

Ascent's Q28OA-100G-LP10 supports the 2-wire serial communication protocol as defined in the QSFP28 MSA. Which allows real-time access to the following operating parameters:

- Transceiver temperature
- Laser bias current
- Transmitted optical power
- Received optical power
- Transceiver supply voltage

It also provides a sophisticated system of alarm and warning flags, which may be used to alert end-users when particular operating parameters are outside of a factory-set normal range.

The operating and diagnostics information is monitored and reported by a Digital Diagnostics Transceiver Controller inside the transceiver, which is accessed through the 2-wire serial interface. When the serial protocol is activated,
the serial clock signal (SCL pin) is generated by the host. The positive edge clocks data into the QSFP28 transceiver into those segments of its memory map that are not write-protected. The negative edge clocks data from the QSFP28 transceiver. The serial data signal (SDA pin) is bi-directional for serial data transfer. The host uses SDA in conjunction with SCL to mark the start and end of serial protocol activation. The memories are organized as a series of 8-bit data words that can be addressed individually or sequentially. The 2-wire serial interface provides sequential or random
access to the 8-bit parameters, addressed from 00h to the maximum address of the memory.

This clause defines the Memory Map for QSFP28 transceiver used for serial ID, digital monitoring and certain control functions. The interface is mandatory for all QSFP28 devices. The memory map has been changed in order to
accommodate 4 optical channels and limit the required memory space. The structure of the memory is shown in QSFP28 Memory Map. The memory space is arranged into a lower, single page, address space of 128 bytes and multiple upper address space pages. This structure permits timely access to addresses in the lower page, e.g. Interrupt Flags and Monitors. Less time critical entries, e.g. serial ID information and threshold settings, are available with the Page Select function. The structure also provides address expansion by adding additional upper pages
as needed. For example, in QSFP28 Memory Map upper pages 01 and 02 are optional. Upper page 01 allows implementation of Application Select Table, and upper page 02 provides user read/write space. The lower page and upper pages 00 and 03 are always implemented. The interface address used is A0xh and is mainly used for time
critical data like interrupt handling in order to enable a “one-time-read” for all data related to an interrupt situation. After an Interrupt, IntL, has been asserted, the host can read out the flag field to determine the effected channel and type of flag.

For more detailed information including memory map definitions, please see the QSFP28 MSA Specification.

Pin Assignment

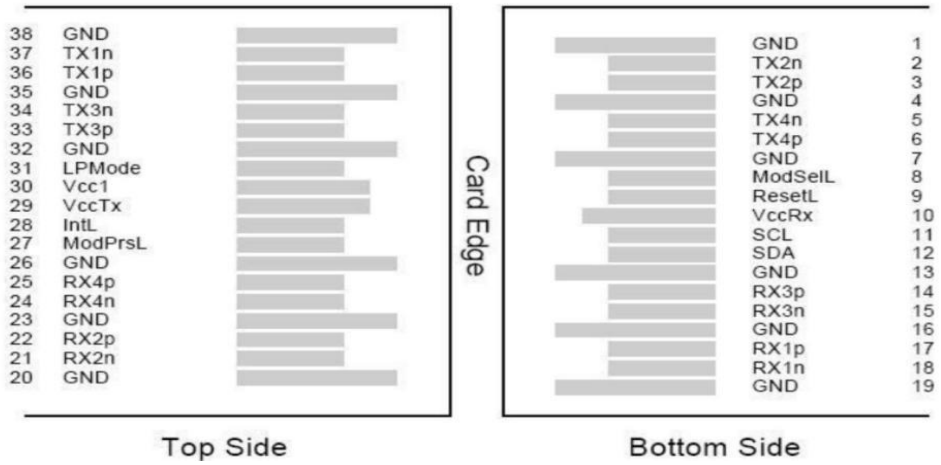

Pin	Symbol	Name/Description	Note
1	GND	Transmitter Ground (Common with Receiver Ground)	1
2	Tx2n	Transmitter Inverted Data Input	
3	Tx2p	Transmitter Non-Inverted Data output	
4	GND	Transmitter Ground (Common with Receiver Ground)	1
5	Tx4n	Transmitter Inverted Data Input	
6	Tx4p	Transmitter Non-Inverted Data output	
7	GND	Transmitter Ground (Common with Receiver Ground)	1
8	ModSelL	Module Select	
9	ResetL	Module Reset	
10	VccRx	3.3V Power Supply Receiver	2
11	SCL	2-Wire serial Interface Clock	
12	SDA	2-Wire serial Interface Data	
13	GND	Transmitter Ground (Common with Receiver Ground)	
14	Rx3p	Receiver Non-Inverted Data Output	

15	Rx3n	Receiver Inverted Data Output	
16	GND	Transmitter Ground (Common with Receiver Ground)	1
17	Rx1p	Receiver Non-Inverted Data Output	
18	Rx1n	Receiver Inverted Data Output	
19	GND	Transmitter Ground (Common with Receiver Ground)	1
20	GND	Transmitter Ground (Common with Receiver Ground)	1
21	Rx2n	Receiver Inverted Data Output	
22	Rx2p	Receiver Non-Inverted Data Output	
23	GND	Transmitter Ground (Common with Receiver Ground)	1
24	Rx4n	Receiver Inverted Data Output	1
25	Rx4p	Receiver Non-Inverted Data Output	
26	GND	Transmitter Ground (Common with Receiver Ground)	1
27	ModPrsl	Module Present	
28	IntL	Interrupt	
29	VccTx	3.3V power supply transmitter	2
30	Vcc1	3.3V power supply	2
31	LPMode	Low Power Mode	
32	GND	Transmitter Ground (Common with Receiver Ground)	1
33	Tx3p	Transmitter Non-Inverted Data Input	
34	Tx3n	Transmitter Inverted Data Output	
35	GND	Transmitter Ground (Common with Receiver Ground)	1
36	Tx1p	Transmitter Non-Inverted Data Input	
37	Tx1n	Transmitter Inverted Data Output	
38	GND	Transmitter Ground (Common with Receiver Ground)	1

Notes:

1. GND is the symbol for signal and supply (power) common for QSFP28 modules. All are common within the QSFP28 module and all module voltages are referenced to this potential unless otherwise noted. Connect these directly to the host board signal common ground plane.
2. VccRx, Vcc1 and VccTx are the receiving and transmission power suppliers and shall be applied concurrently. Recommended host board power supply filtering is shown below. Vcc Rx, Vcc1 and Vcc Tx may be internally connected within the QSFP28 transceiver module in any combination. The connector pins are each rated for a maximum current of 500mA.

Specifications

Absolute Maximum Ratings

Parameter	Symbol	Min.	Typ.	Max.	Unit	Note
Storage Temperature	Ts	-40	-	85	°C	
Relative Humidity	RH	5	-	95	%	
Power Supply Voltage	VCC	-0.3	-	4	V	
Signal Input Voltage		Vcc-0.3	-	Vcc+0.3	V	

Recommended Operating Conditions

Parameter	Symbol	Min.	Typ.	Max.	Unit	Note

Operating Case	Tcase	0	-	70	°C	
Temperature		-10	-	85	°C	
Power Supply Voltage	VCC	3.13	3.3	3.47	V	
Power Supply Current	ICC			1010 1150	mA mA	Commercial Industrial
Data Rate	BR	25.78 125		Gbps	Each channel	
Transmission Distance	TD	-	10	km		
Coupled fiber	Single-mode fiber				9/125 µm SMF	

Optical Characteristics

Parameter	Symbol	Min	Typ.	Max	Unit	Note
Transmitter						
Signaling Speed per Lane			25.78125 ± 100 ppm		Gbps	
Wavelength Assignment	λ0	1294.53	1295.56	1296.59	nm	
	λ1	1299.02	1300.05	1301.09	nm	
	λ2	1303.54	1304.58	1305.63	nm	
	λ3	1308.09	1309.14	1310.19	nm	
Total Output Power	POUT			10.5	dBm	
Transmit OMA per Lane		-1.3		4.5	dBm	
Average Launch Power per Lane		-4.3		4.5	dBm	
SMSR		30			dB	
Optical Extinction Ratio	ER	4			dB	
Average launch Power off per lane	Poff			-30	dBm	
RIN	RIN			-130	dB/Hz	
Output Eye Mask Definition {X1, X2, X3, Y1, Y2, Y3}	{0.25, 0.4, 0.45, 0.25, 0.28, 0.4}					1
Receiver						
Signaling Speed per Lane			25.78125 ± 100 ppm		Gbps	
Wavelength Assignment		1294.53	1295.56	1296.59	nm	
		1299.02	1300.05	1301.09	nm	
		1303.54	1304.58	1305.63	nm	
		1308.09	1309.14	1310.19	nm	
Receive Power (OMA) per Lane	ROMA			4.5	dBm	
Average Input Power per Channel	RXPx	-10.6		4.5	dBm	2
Rx Sensitivity per lane	RSENS			-8.6	dBm	

LOS De-Assert	LOSD -30		dBm	
LOS Assert	LOSA	-12	dBm	
Receiver Reflectance	Rr	-26	dB	

Notes:

1. Hit ratio $5x10^{-5}$.
2. Measured with a PRBS 2^{31}-1 test pattern, @ 25.78Gb/s, BER<10^{-12}.

Electrical Characteristics

Parameter	Symbol	Min	Typ.	Max	Unit	Note
Supply Voltage	Vcc	3.13	3.3	3.47	V	
Supply Current	Icc			1010 1150	Ma	Commercial Industrial
Transmitter Input Differential Impedance	Rin		100		Ω	1
Differential Data Input	Vin, pp	180		1000	mV	
Swing Transmit Disable	VD	Vcc-1.3		Vcc	V	
Voltage Transmit Enable Voltage	VEN	Vee		Vee+0.8	V	2
Receiver Differential Data Output	Vout, pp	300		850	mV	3
Swing LOS Fault	VLOSfault	Vcc-1.3		VccHOST	V	4
LOS Normal	VLOSnorm	Vee		Vee+0.8	V	4

Notes:

1. Connected directly to TX data input pins. AC coupled thereafter.
2. Or open circuit.
3. Into 100 Ω differential termination.
4. Loss Of Signal is LVTTL. Logic 0 indicates normal operation; logic 1 indicates no signal detected.

Ordering Information

Product Name	Product Description
Q28OA-100G-LP10	QSFP28 plug-in, 100GBASE-LR4 1295 nm, 1300 nm, 1304 nm, 1309 nm, 10 km optical transceiver, LC, DOM
C28OA-100G-LP10	QSFP28 plug-in, 100GBASE-LR4 1295 nm, 1300 nm, 1304 nm, 1309 nm, 10 km optical transceiver, LC, DOM, Compatible with Cisco
J28OA-100G-LP10	QSFP28 plug-in, 100GBASE-LR4 1295 nm, 1300 nm, 1304 nm, 1309 nm, 10 km optical transceiver, LC, DOM, Compatible with Juniper

Contact Information

Ascent Communication Technology Ltd

AUSTRALIA
140 William Street, Melbourne
Victoria 3000, AUSTRALIA
Phone: +61-3-8691 2902

Hong Kong SAR
Room 1210, 12th Floor, Wing Tuck Commercial Centre
181 Wing Lok Street, Sheung Wan , Hong Kong SAR
Phone: +852-2851 4722

CHINA
Unit 1933, 600 Luban Road
200023, Shanghai, CHINA
Phone: +86-21-60232616

USA
2710 Thomes Ave
Cheyenne, WY 82001, USA
Phone: +1 203 350 9822

EUROPE
Pfarrer-Bensheimer-Strasse 7a
55129 Mainz, GERMANY
Phone: +49 (0) 6136 926 3246

VIETNAM
11th Floor, Hoa Binh Office Tower
106 Hoang Quoc Viet Street, Nghia Do Ward
Cau Giay District, Hanoi 10649, VIETNAM
Phone: +84-24-37955917

WEB:www.ascentcomtec.com

EMAIL:sales@ascentcomtec.com

Specifications and product availability are subject to change without notice.
Copyright © 2026 Ascent Communication Technology Limited. All rights reserved.
Ver. ACT_Q28OA-100G-LP10_Datasheet_V1f_Mar_2022