QSFP28 BIDI 100 Gb/s ZR4 Transceiver 80km

QSFP Series

Ascent's Q28-100G-BD-LU80/LD80 is a 100Gbps BIDI QSFP28 ZR4 lite transceiver, designed for extended-range applications with up to 80 km of 100GBase-BX throughput over single-mode fiber (SMF) using LC connectors. Its robust design enables reliable high-speed connectivity for data centers, storage area networks, and 100G Ethernet.

This transceiver operates bidirectionally, supporting two wavelength configurations. The Q28-100G-BD-LD80 transmits at 1295.56, 1300.05, 1304.58, and 1309.14nm, while the Q28-100G-BD-LU80 transmits at 1273.54, 1277.89, 1282.26, and 1286.66nm, both with complementary reception wavelengths. For optimal use, it requires pairing with compatible devices of matching wavelengths.

With digital diagnostics through its QSFP28 MSA-compliant I2C interface, the Q28-100G-BD-LU80/LD80 supports real-time monitoring of key parameters. Easy to install and hot-swappable, this transceiver is ideal for scalable, high-demand network environments, offering flexibility and reliability for long-distance data transmission.

Key Features

- Support 100GBASE-ZR4 103.125Gb/s and OTU4 111.81Gbps
- QSFP28 MSA compliant, Simplex LC interface
- Compliant with IEEE 802.3-2012 Clause 88 standard
- Compliant with IEEE 802.3bm CAUI-4 chip to module electrical standard
- Compliant with ITU-T G.959.1-2012-02 standard
- Wide operating temperature: 0°C~70°C
- RoHS Compliant Part

Specifications

Parameter	Symbol	Min.	Typ.	Max.	Unit	Note
Operating Case Temperature	T_c	0		+70	°C	
Power Supply Voltage	VccT, R	3.13	3.3	3.47	V	
Power Supply Current	Icc		1200	1800	mA	
Maximum Power Consumption	P_D			6.5	W	
Blue Side Four Lane Wavelength Range	λ1	1272.54	1273.54	1274.54	nm	
	λ2	1276.89	1277.89	1278.89	nm	
	λ3	1281.25	1282.26	1283.27	nm	
	λ4	1285.65	1286.66	1287.68	nm	
Red Side Four Lane Wavelength Range	λ1	1294.56	1295.56	1296.56	nm	
	λ2	1299.05	1300.05	1301.05	nm	
	λ3	1303.58	1304.58	1305.58	nm	
	λ4	1308.14	1309.14	1310.14	nm	
Total Average Launch Power	PT	8	-	12.5	dBm	
Average Launch Power, each Lane		+2	-	6.5	dBm	
Average Launch Power OFF Transmitter, each Lane	Poff			-30	dBm	
Total Damage Threshold	THd			5.5	dBm	
Receiver Sensitivity per Lane	R			-28	dBm	
Average Power at Receiver Input, each Lane	R	-28		0	dBm	
Transmit Input Diff Voltage	VI	150		1200	mV	
Rx Output Diff Voltage	Vo	370	600	950	mV	

Outline Diagram

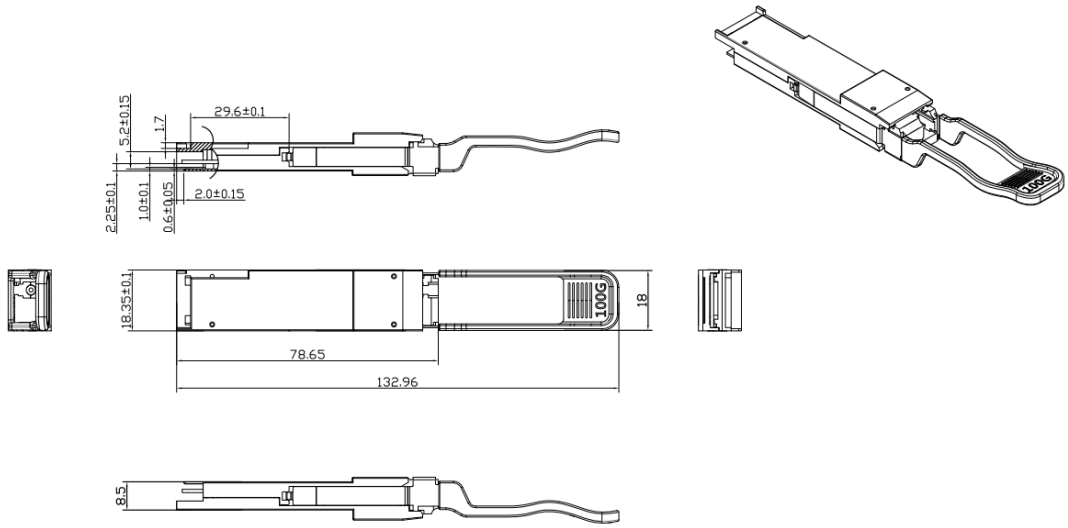

Ordering Information

Product Name	Product Description
Q28-100G-BD-LU80	QSFP28 Plug-in, 100GBASE-ZR4, 80km, BiDi, TX1273.54, 1277.89, 1282.26, 1286.66nm; RX1295.56, 1300.05, 1304.58, 1309.14nm, SMF, Simplex LC, DOM
Q28-100G-BD-LD80	QSFP28 Plug-in, 100GBASE-ZR4, 80km, BiDi, TX1295.56, 1300.05, 1304.58, 1309.14nm; RX1273.54, 1277.89, 1282.26, 1286.66nm, SMF, Simplex LC, DOM

Ascent Communication Technology Ltd

AUSTRALIA
140 William Street, Melbourne
Victoria 3000, AUSTRALIA
Phone: +61-3-8691 2902

Hong Kong SAR
Room 1210, 12th Floor, Wing Tuck Commercial Centre
181 Wing Lok Street, Sheung Wan , Hong Kong SAR
Phone: +852-2851 4722

CHINA
Unit 1933, 600 Luban Road
200023, Shanghai, CHINA
Phone: +86-21-60232616

USA
2710 Thomes Ave
Cheyenne, WY 82001, USA
Phone: +1 203 350 9822

EUROPE
Pfarrer-Bensheimer-Strasse 7a
55129 Mainz, GERMANY
Phone: +49 (0) 6136 926 3246

VIETNAM
11th Floor, Hoa Binh Office Tower
106 Hoang Quoc Viet Street, Nghia Do Ward
Cau Giay District, Hanoi 10649, VIETNAM
Phone: +84-24-37955917

WEB: www.ascentcomtec.com

EMAIL: sales@ascentcomtec.com

Specifications and product availability are subject to change without notice.
Copyright © 2026 Ascent Communication Technology Limited. All rights reserved.
Ver. ACT_Q28-100G-BD-LU80-LD80_Overview_V1c_Nov_2023