25 Gb/s 850 nm Multi-Mode SFP28 Transceiver

SFP+ Series

- Up to 25.7813 Gb/s data links
- Up to 70 m transmission distance on OM3
- Up to 100 m transmission distance on OM4
- VSCEL laser and PIN receiver
- Metal enclosure
- 2-wire interface with integrated digital diagnostic monitoring
- Hot-pluggable SFP+ footprint
- Compliant with SFF 8431 and SFF 8472

Ascent's SFP28 25Gb/s transceiver is an integrated fiber optic transceiver that provides a high-speed serial link at signaling rates up to 25.78 Gb/s. It is a single-channel, pluggable, fiber-optic module for short-range data communication and interconnect Ethernet applications.

This module is designed to operate over multimode fiber systems using a nominal wavelength of 850nm. It has a transmission distance of up to 70 m on OM3 and 100 m on OM4 multi-mode fibers. The optical interface uses duplex LC receptacle. This module incorporates Gigalight Technologies proven circuit and VCSEL technology to provide reliable long life, high performance, and consistent service.

The SFP28-25LP-85-01 module complies with SFF-8431 and SFF 8472 standards. It features a metal enclosure for lower EMI and utilizes a 2-wire interface that is compliant with the serial communication protocol as defined in the SFP+ MSA. It also provides a unique integrated digital diagnostic monitoring interface, allowing for real-time access to device operating parameters. This module is hot-pluggable.

Key Features

- Supports up to 25.7813 Gb/s bit rates
- Up to 70 m transmission distance on OM3
- Up to 100 m transmission distance on OM4
- VSCEL laser and PIN receiver
- Metal enclosure, for lower EMI
- 2-wire interface with integrated Digital Diagnostic monitoring
- Hot-pluggable SFP+ footprint
- Specifications compliant with SFF 8431 and SFF 8472
- Compliant with SFP+ MSA with LC connector
- Single 3.3 V power supply

Outline Dimensions

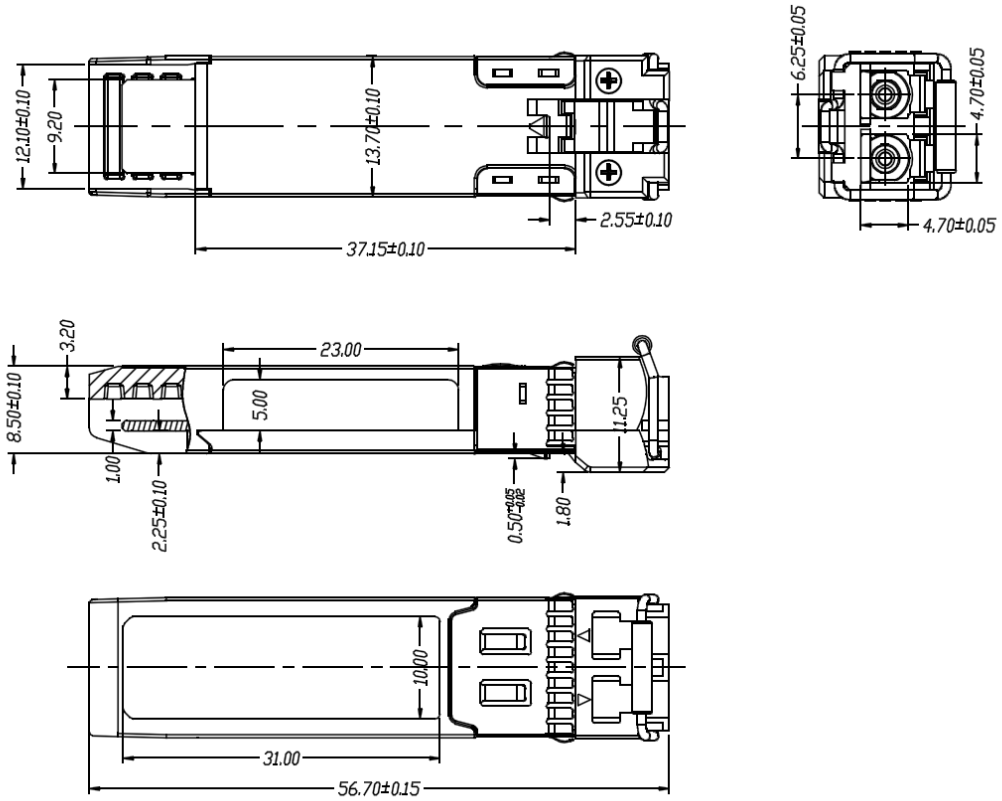

Recommended Interface Circuit

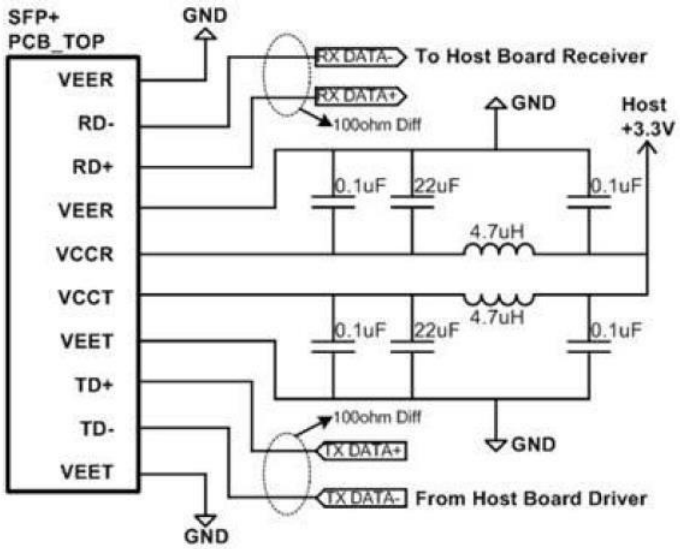

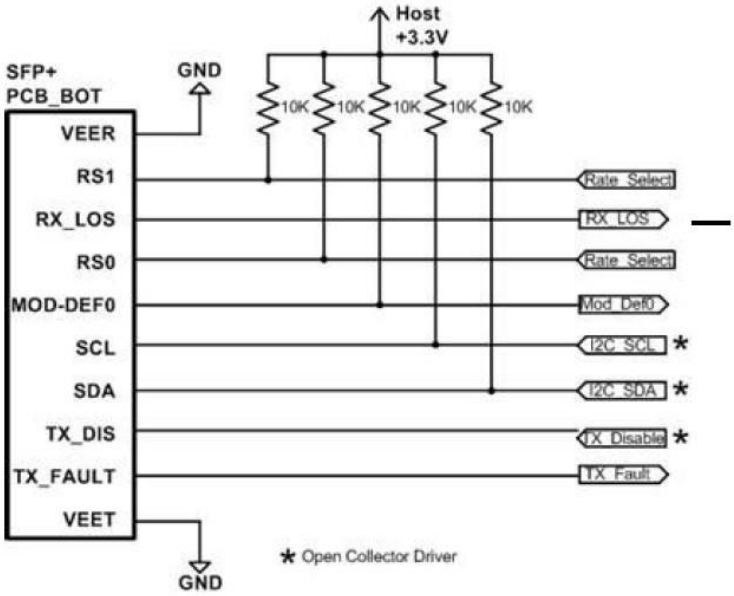

Pin Assignment

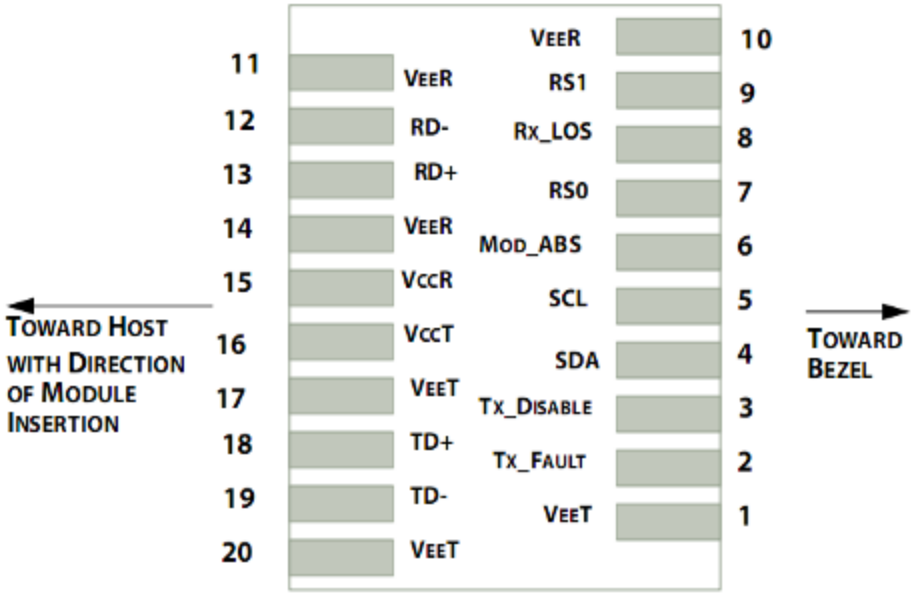

Pin out of Connector Block on Host Board

Pin	Symbol	Name/Description	Note
1	V_{EET}	Transmitter Ground (Common with Receiver Ground)	1
2	T_{FAULT}	Transmitter Fault.	2
3	T_{DIS}	Transmitter Disable. Laser output disabled on high or open.	3
4	SDA	2-wire Serial Interface Data Line	4
5	SCL	2-wire Serial Interface Clock Line	4
6	MOD_ABS	Module Absent. Grounded within the module	4
7	RS0	Rate Select 0	5
8	LOS	Loss of Signal indication. Logic 0 indicates normal operation.	6
9	RS1	No connection required	1
10	V_{EER}	Receiver Ground (Common with Transmitter Ground)	1
11	V_{EER}	Receiver Ground (Common with Transmitter Ground)	1
12	RD-	Receiver Inverted DATA out. AC Coupled	
13	RD+	Receiver Non-inverted DATA out. AC Coupled	
14	V_{EER}	Receiver Ground (Common with Transmitter Ground)	1
15	V_{CCR}	Receiver Power Supply	
16	V_{CCT}	Transmitter Power Supply	
17	V_{EET}	Transmitter Ground (Common with Receiver Ground)	1
18	TD+	Transmitter Non-Inverted DATA in. AC Coupled.	
19	TD-	Transmitter Inverted DATA in. AC Coupled.	
20	V_{EET}	Transmitter Ground (Common with Receiver Ground)	1

Notes:

1. Circuit ground is internally isolated from chassis ground.

2. T_{FAULT} is an open collector/drain output, which should be pulled up with a 4.7 kΩ to 10 kΩ resistor on the host board if intended for use. Pull up voltage should be between 2.0 V to Vcc + 0.3 V. A high output indicates a transmitter fault caused by either the TX bias current or the TX output power exceeding the preset alarm thresholds. A low output indicates normal operation. In the low state, the output is pulled to <0.8V.
3. Laser output disabled on T_{DIS} > 2.0 V or open, enabled on T_{DIS} < 0.8 V.
4. Should be pulled up with 4.7 kΩ to 10 kΩ host board to a voltage between 2.0 V and 3.6 V. MOD_ABS pulls line low to indicate module is plugged in.
5. Internally pulled down per SFF-8431 Rev 4.1.
6. LOS is an open collector output. It should be pulled up with 4.7 kΩ to 10 kΩ on the host board to a voltage between 2.0 V and 3.6 V. Logic 0 indicates normal operation; logic 1 indicates loss of signal.

Digital Diagnostics

Digital Diagnostic Memory Map

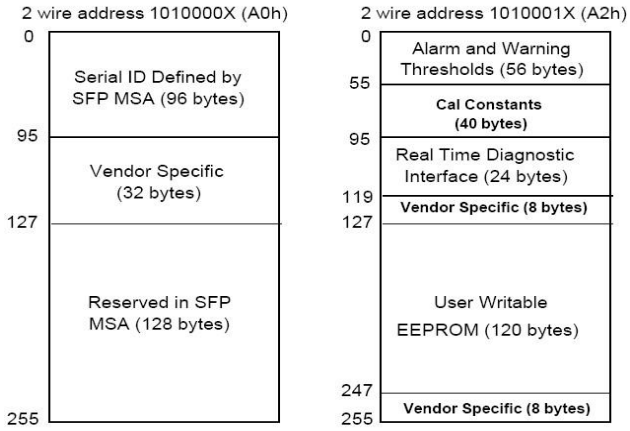

Digital Diagnostic Monitoring Information

Parameter	Unit	Accuracy
Case Temperature	°C	±3
Supply Voltage	V	±3%
Tx Bias Current	mA	±10%
Tx Optical Power	dB	±3
Rx Optical Power	dB	±3

Specifications

Absolute Maximum Ratings

Parameter	Symbol	Min.	Typ.	Max.	Unit	Notes
Storage Temperature	Ts	-40	-	85	°C	1
Operating Temperature	T_{OP}	0	-	70	°C	
Relative Humidity	RH	0	-	85	%	2
Power Supply Voltage	V_{CC}	-0.5	-	3.6	V	

Notes:

1. Limited by the fiber cable jacket, not the active ends.
2. Non-condensing.

Optical Characteristics (T_{OP} = 0 °C to +70 °C, V_{CC} = 3.3 V ± 5 %)

Parameter	Symbol	Min.	Typ.	Max.	Unit	Notes
Transmitter						
Center Wavelength	λ_C	840	850	860	nm	
Side Mode Suppression Ratio	SMSR	30			dB	
Spectral Width	P_m			1	nm	
Average Output Power	P_{avg}	-8.4		2.4	dBm	
Optical Modulation Amplitude (OMA)	P_{OMA}	-6.4		3	dBm	
Extinction Ratio	ER	2			dB	
Transmitter Dispersion Penalty	TDEC			4.3	dB	
Optical Return Loss Tolerance	TOL			20	dB	
Transmitter OFF Output Power	P_{OFF}			-30	dBm	
Transmitter Eye Mask Definition {X1, X2, X3, Y1, Y2, Y3}, Hit ratio 1.5E-3	{0.3, 0.38, 0.45, 0.35, 0.41, 0.5}					
Receiver						
Center Wavelength	λc	840	850	860	nm	
Receiver Stress Sensitivity, OMA				-5.2	dBm	
Receiver Sensitivity, Average Power				-10.3	dBm	
Receiver Reflectance	Rfl			-26	dBm	
Loss of Signal Assert	PA	-30			dBm	
Loss of Signal De-assert	PD	-13	dBm			
LOS Hysteresis	PD- PA	0.5	dB		dB	

Electrical Characteristics (T_{OP} = 0 °C to +70 °C, V_{CC} = 3.3 V ± 5 %)

Parameter	Symbol	Min	Typ	Max	Unit	Notes
Supply Voltage	V_{CC}	3.135	3.3	3.465	V	
Supply Current	I_{CC}			300	mA	
Transmitter						

Input Differential Impedance	R_{in}		100		Ω	1
Differential Data Input Swing	$V_{in, pp}$	100		800	mV	
Transmit Disable Voltage	VD	2		V_{CC}	V	
Transmit Enable Voltage	VEN	Vee		Vee+0.8	V	
Receiver						
Differential Data Output Swing	$V_{out, pp}$	100		400	mV	2
LOS Fault	VLOS_fault	2		V_{ccHOST}	V	3
LOS Normal	VLOS_norm	Vee		Vee+0.8	V	3
Power Supply Noise Tolerance	V_{CCT}/V_{CCR}	Per SFF-8431 Rev 4.1				4

Notes:

1. Connected directly to TX data input pins. AC coupled thereafter.
2. Into 100 Ω differential termination.
3. LOS is an open collector output. Should be pulled up with 4.7 kΩ to 10 kΩ on the host board. Normal operation is logic 0; loss of signal is logic 1. Maximum pull-up voltage is 5.5V.
4. Testing methodology per SFF-8431. Rev 4.1.

Ordering Information

Product Name	Product Description
SFP28-25LP-85-01	SFP28 Plug-in, 25Gbps, 100m, TX/RX 850nm, on two multimode fibres, LC/PC

Contact Information

Ascent Communication Technology Ltd

AUSTRALIA
140 William Street, Melbourne
Victoria 3000, AUSTRALIA
Phone: +61-3-8691 2902

CHINA
Unit 1933, 600 Luban Road
200023, Shanghai CHINA
Phone: +86-21-60232616

EUROPE
Pfarrer-Bensheimer-Strasse 7a
55129 Mainz, GERMANY
Phone: +49 (0) 6136 926 3246

HONG KONG SAR
Unit 9, 12th Floor, Wing Tuck Commercial Centre
177 Wing Lok Street, Sheung Wan, HONG KONG
Phone: +852-2851 4722

USA
2710 Thomes Ave
Cheyenne, WY 82001, USA
Phone: +1-203 816 5188

VIETNAM
15 /F TTC Building, Duy Tan Street
Cau Giay Dist., Hanoi, VIETNAM
Phone: +84 168 481 8348

WEB: www.ascentcomtec.com

EMAIL: sales@ascentcomtec.com

Specifications and product availability are subject to change without notice.

Ver. ACT_SFP28-25LP-85-01_Datasheet_V1d_Feb_2020