400G OSFP to 2x200G QSFP56 AOC Breakout Cable

400G OSFP Cable Series

- **Four-channel full-duplex active optical cable from OSFP to two QSFP56 cable end**
- **Supports 53.125Gb/s per channel**
- **Low Power Dissipation, Max 8W on OSFP end, Max. 4W on QSFP56 end**
- **8x50G PAM4 VCSEL/PIN photo detector**
- **Operating Case Temperature: 0°C~70°C**
- **Compliant to Class 1M Laser Safety**
- **OSFP/QSFP form factor**

Ascent's 400G OSFP product is an OSFP to 2x QSFP56, 400Gb/s to 2 x 200Gb/s Active Optical Breakout Cable (AOC) designed for connecting Mellanox NDR switch with OSFP cage to legacy 2 Mellanox HDR switch/HCA QSFP56 cages.

The cable is compliant with SFF-8665 for the QSFP56 pluggable solution. It provides connectivity between system units with a OSFP 400Gb/s connector on one side and two separate QSFP56 200Gb/s connectors on the other side, such as a switch and two servers.

The cable connects data signals from each of the 8 MMF (Multi Mode Fiber) pairs on the single OSFP end to the four pairs of each of the QSFP56 multiport ends. It supports 53.125Gb/s per channel.

Ascent's active fiber cable solutions provide power-efficient connectivity for data center interconnects. It enables higher port bandwidth, density and configurability at a low cost, and reduced power requirement in the data centers. four-channel full-duplex active optical cable. The OSFP cable has low power dissipation and 8x50g PAM VCSEL/PIN photo detector. Its operating case temperature is 0°C~70°C.

Key Features

- Four-Channel full-Duplex active optical cable from OSFP to two QSFP56 cable end
- Supports 53.125Gb/s per channel
- Low Power Dissipation, Max 8W on OSFP end, Max. 4W on QSFP56 end.
- 8x50G PAM4 VCSEL/PIN photo detector
- Operating Case Temperature: 0°C ~70
- Compliant to Class 1M Laser Safety
- OSFP form factor compliance to
  - Compliant to OSFP Rev. 5.0
  - SFF-8679 electrical interface
  - SFF-8661 Pluggable Module
  - CMIS Rev. 4.0 Management Interface
  - IEEE 802.3cd: Physical Layer Specifications and Management Parameters
- QSFP form factor compliance to
  - SFF-8636 Management Interface
  - IEEE 802.3cd: Physical Layer Specifications and Management Parameters

Mechanical Drawing

Product shall be of design, construction and physical dimensions specified on applicable product drawing.

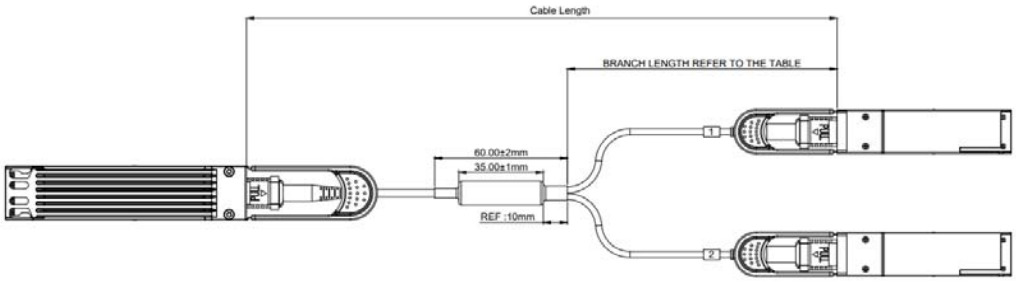

Mechanical Outline

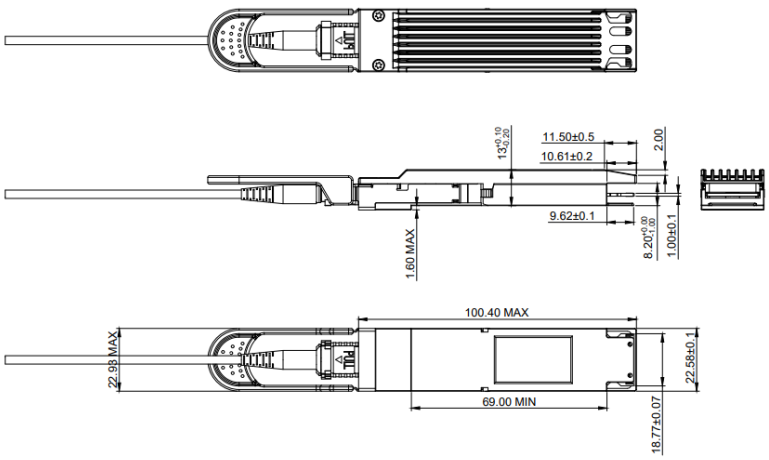
11.50±0.5
10.61±0.2
2.00
9.62±0.1
1.60 MAX
1.00±0.1
100.40 MAX
22.98 MAX
22.58±0.1
69.00 MIN
18.77±0.07

OSFP

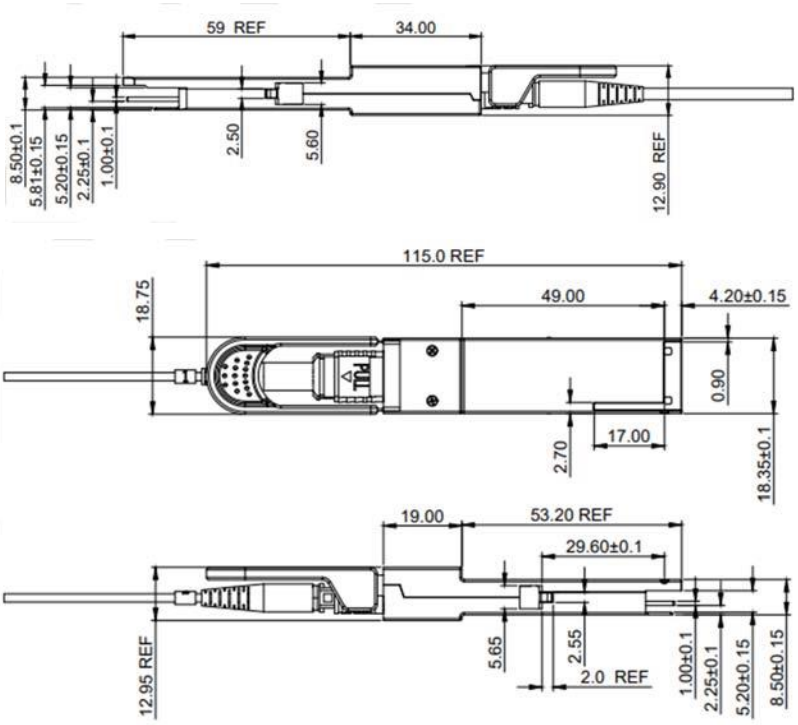
59 REF
34.00
8.50±0.1
5.81±0.15
5.20±0.15
2.25±0.1
1.00±0.1
2.50
5.60
12.90 REF
115.0 REF
18.75
49.00
4.20±0.15
0.90
2.70
17.00
18.35±0.1
19.00
53.20 REF
29.60±0.1
12.95 REF
5.65
2.55
2.0 REF
1.00±0.1
2.25±0.1
5.20±0.15
8.50±0.15

QSFP

Module Pad Assignment and Layout

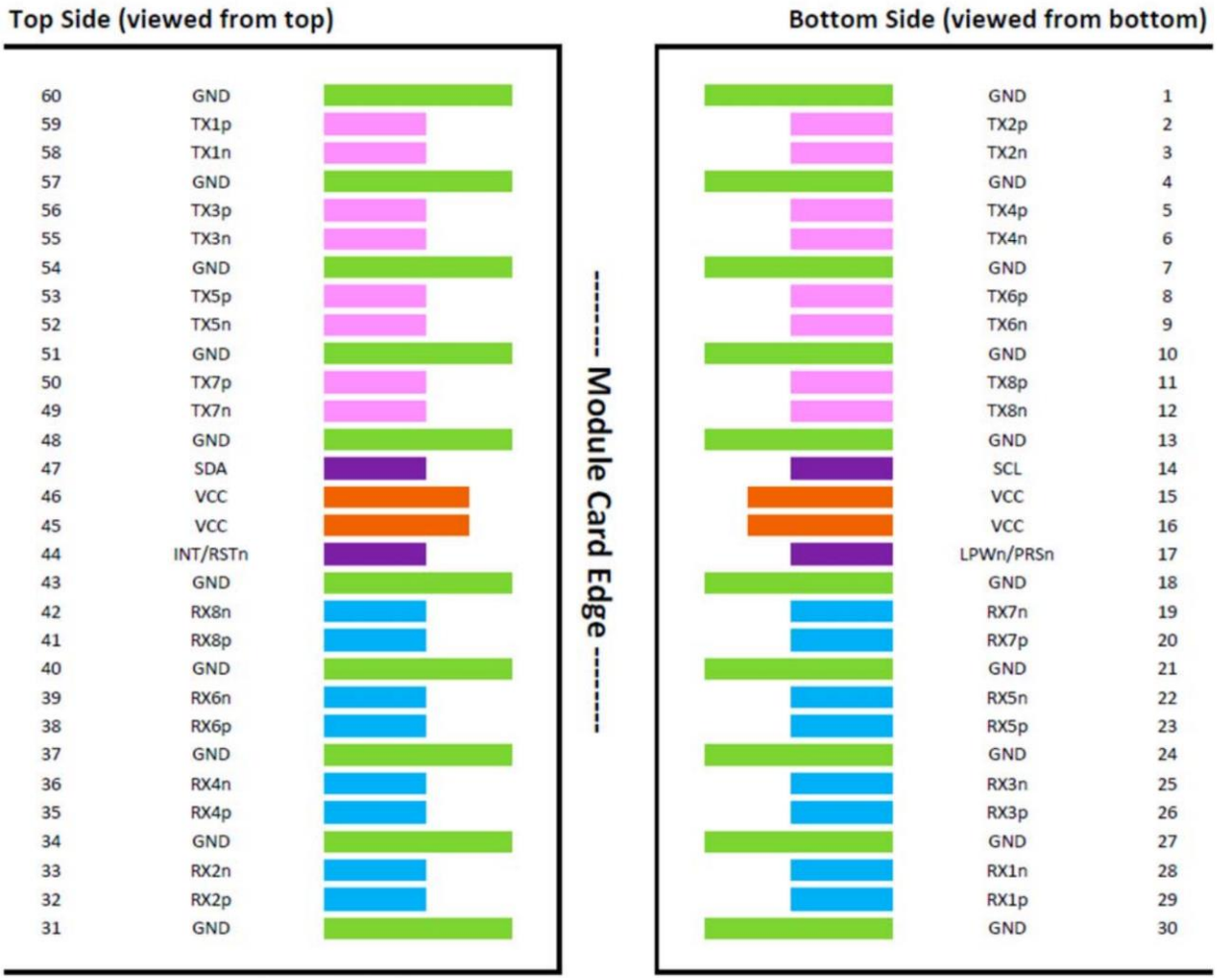

MSA Compliant Connector

Pin Descriptions (compliant SFF-8679)

Pin	Symbol	Description	Plug Sequence
1	GND	Ground	
2	TX2n	Transmitter Inverted Data Input	
3	TX2p	Transmitter Non-Inverted Data Input	
4	GND	Ground	1
5	TX4n	Transmitter Inverted Data Input	
6	TX4p	Transmitter Non-Inverted Data Input	
7	GND	Ground	1
8	ModSelL	Module Select	2
9	ResetL	Module Select	2
10	Vcc RX +3.3V	+3.3V Receiver Power Supply Receiver	
11	SCL	2-wire Serial Interface Clock	2

12	SDA	2-wire Serial Interface Data	2
13	GND	Ground	1
14	RX3p	Receiver Non-Inverted Data Output	
15	RX3n	Receiver Inverted Data Output	
16	GND	Ground	1
17	RX1p	Receiver Non-Inverted Data Output	
18	RX1n	Receiver Inverted Data Output	
19	GND	Ground	1
20	GND	Ground	1
21	RX2n	Receiver Inverted Data Output	
22	RX2p	Receiver Non-Inverted Data Output	
23	GND	Ground	1
24	RX4n	Receiver Inverted Data Output	
25	RX4p	Receiver Non-Inverted Data Output	
26	GND	Ground	1
27	ModPrsL	Module Present, internal pulled down to GND	
28	IntL	Interrupt output, should be pulled up on host board	
29	Vcc TX	+3.3V Transmitter Power Supply	
30	Vcc1	+3.3V Power Supply	
31	LPMode	Low Power Mode	2
32	GND	Ground	
33	TX3p	Transmitter Non-Inverted Data Input	
34	TX3n	Transmitter Inverted Data Input	
35	GND	Ground	
36	TX1p	Transmitter Non-Inverted Data Input	
37	TX1n	Transmitter Inverted Data Input	
38	GND	Ground	1

1 GND is the symbol for signal and supply (power) common for the module. All are common within the module and all module voltages are reference to this potential unless otherwise noted. Module circuit ground is isolated from module chassis ground within the module.

2 Open collector, should be pulled up with 4.7~10K ohms on the host board to a voltage between 3.15V and 3.6V.

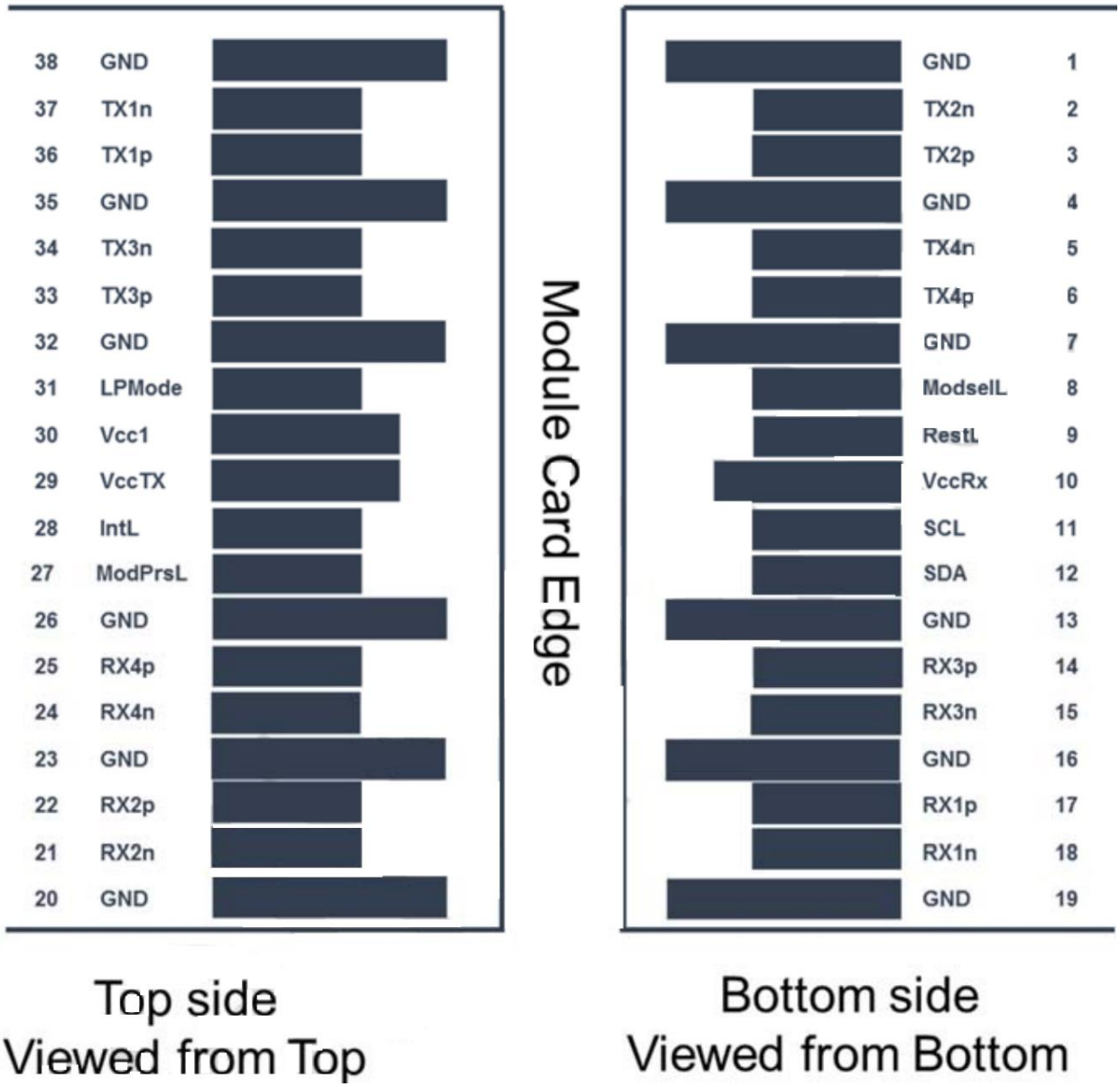

Module Card Edge

Transceiver Block Diagram

OSFP:

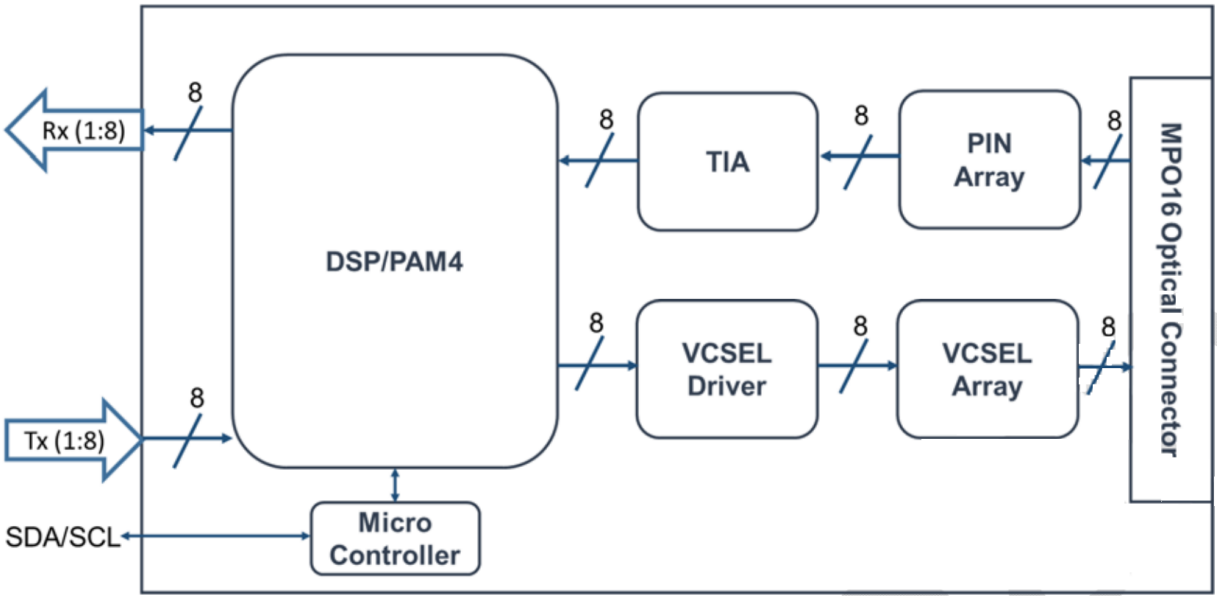

Mpo16 Optical Connector

QSFP:

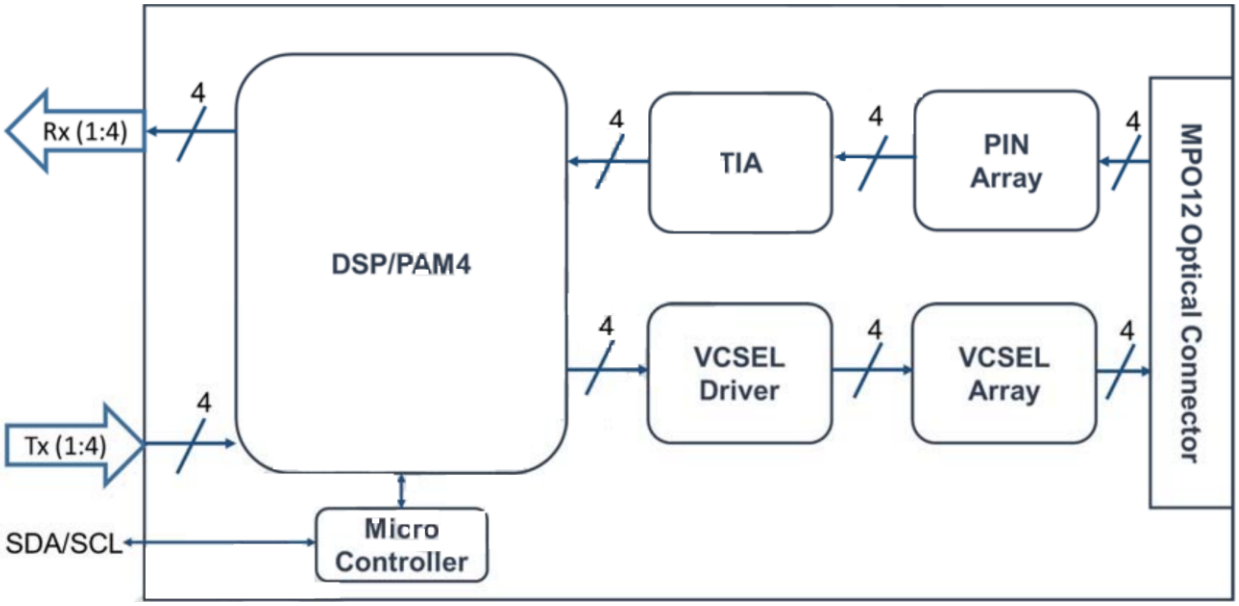

Mpo12 Optical Connector

Memory Map (OSFP compliant CMIS Rev 4.0)

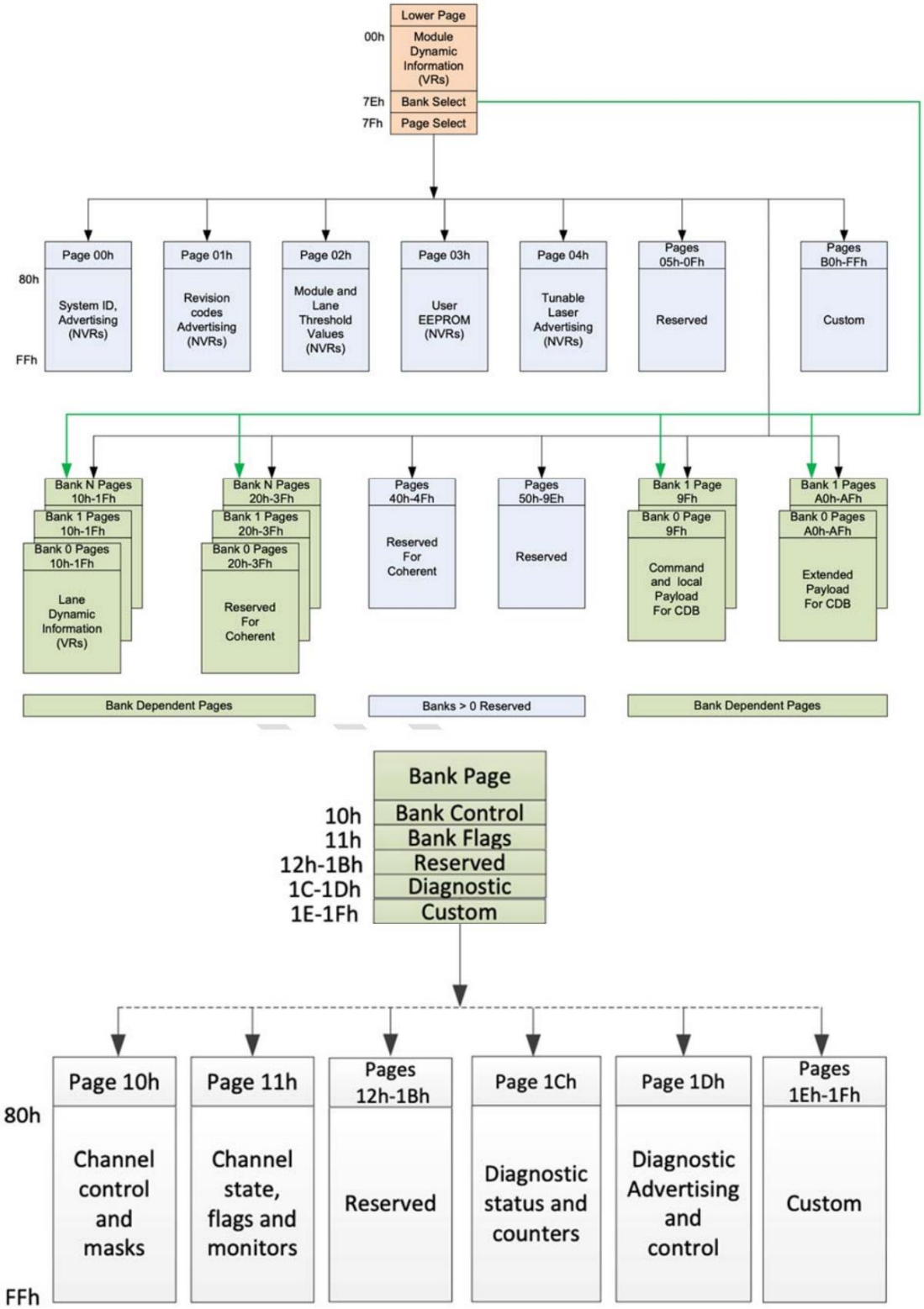

Memory Map

Memory Map (QSFP compliant SFF-8636)

	2-Wire Serial Address 1010000x
	Lower Page 00h
0	Identifier
1 - 2	Status
3 - 21	Interrupt Flags
22-23	Free Side Device Monitors
34-81	Channel Monitors
82-85	Reserved
86-98	Control
99	Reserved
100-104	Hardware Interrupt Pin Masks
105-106	Vendor Specific
107	Reserved
108-110	Free Side Device Properties
111-112	Assigned for use by PCI Express
113	Free Side Device Properties
114-118	Reserved
119-122	Password Change Entry Area (Optional)
123-126	Password Entry Area (Optional)
127	Page Select Byte

	Optional	Optional	Optional
Upper Page 00h	Page 01h	Page 02h	Page 03h
128 Identifier	128 CC_APPS	128-255 User EEPROM data	128-175 Free Side Device Thresholds
129-191 Base ID Fields	129 AST Table Length (TL)		
	130-131 Application Code Entry 0		
	132-133 Application Code Entry 1		
	134-253 other entries		
192-223 Extended ID			176-223 Channel Thresholds
224-255 Vendor Specific ID			224 TX EQ & RX Emphasis Magnitude ID
			225 RX output amplitude indicators
			226-241 Channel Monitor Masks
	254-255 Application Code Entry TL		252-255 Reserved

Memory Map

Specifications

Absolute Maximum Parameters

Exceeding the limits below may damage the active optical cable permanently.

Parameter	Symbol	Min.	Typ.	Max.	Unit	Ref
Maximum Supply Voltage	T_{CC}	-0.5		3.6	°C	
Storage Temperature	V_{sto}	-40		85	°C	
Case Operating Temperature	T_{OP_1}	0		60	°C	①、②
	T_{op_2}	0		70	°C	②
Relative Humidity	RH	5		85	%	

① DDMI temperature reading is measured by the position of T_{op_1}

② Case operating temperature definition:

Top view of module:

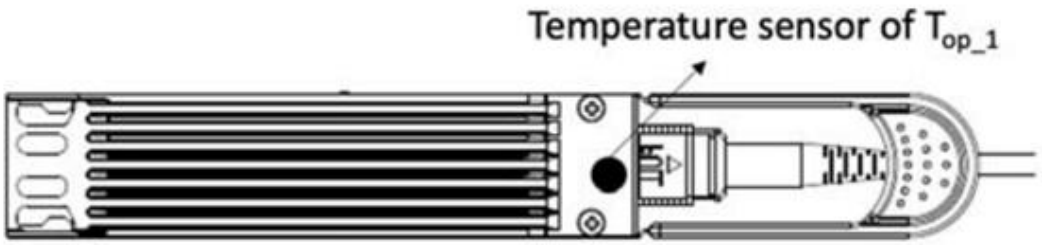

Top View of Module

Bottom view of module:

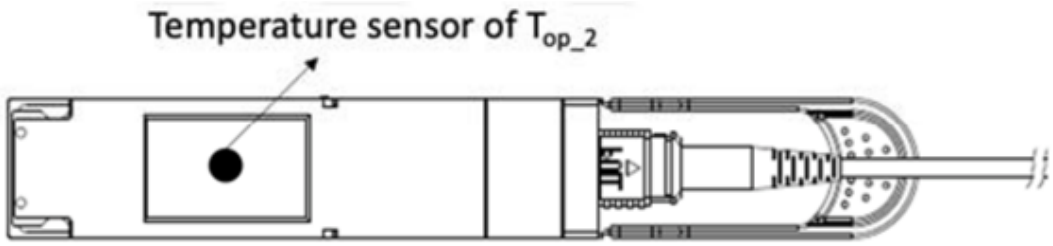

Bottom View of Module

Combination view of module:

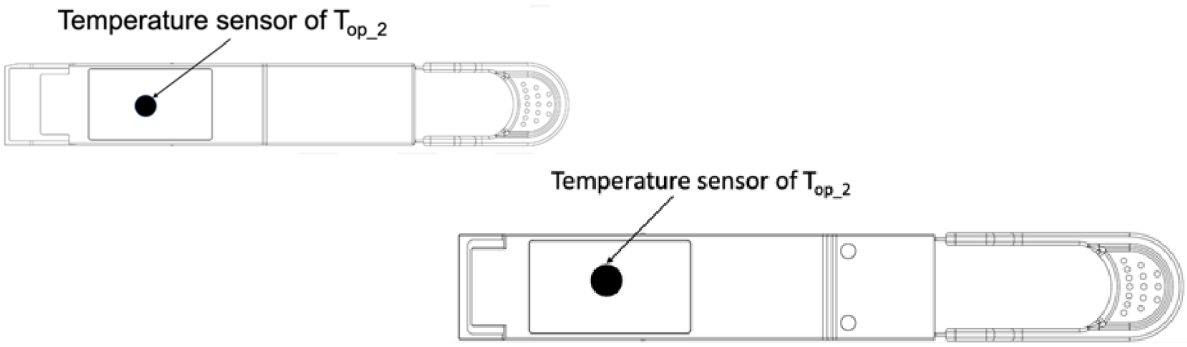

Combination View of Module

PARAMETERS

Parameter	Symbol	Min.	Typ.	Max.	Unit	Ref
Supply Voltage	V_{cc}			12	W	
Power Consumption	P_{Con}			3.63	A	
Bit Rate (PAM4)BR	BR		26.5625		GBd	①
Bit Rate (NRZ)	BR		25.78125		Gbps	
Pre-FEC Bit Error Ratio (PAM4)	BER			$2.4x10^{-4}$		②
Post-FEC Bit Error Ratio (PAM4)	BER			10^{-12}		
Pre-FEC Bit Error Ratio (NRZ)	BER			$5x10^{-5}$		
Post-FEC Bit Error Ratio (NRZ)	BER			10^{-12}		
Center Wavelength	λ_c	840		868	nm	③
Beam Divergence Angle			23		°	
Number of Lanes						
Management Interface		Serial, I2C-based, maximum frequency 400 kHz				④
Logic Input Voltage High	V_{ih}	2		V_{cc}+0.3	V	
Logic Input Voltage Low	V_{il}	-0.3		0.8	V	

① Single lane

② PRBS31Q test pattern is used.

③ As defined by IEEE Std. 802.3bs ™/D3.5

④ As defined by SFF-8636

Electrical Characteristics for OSFP

Parameter	Symbol	Min.	Typ.	Max.	Unit	Ref
Transmitter at TP1a						
AC Common-Mode Output Voltage (RMS)				17.5	mV	
Differential Peak-to-Peak Output Voltage (Transmitter Disabled)				35	mV	
Differential Peak-to-Peak Output Voltage (Transmitter Enabled)				880	mV	

Eye Symmetry Mask Width	ESMW		0.22		UI
Eye Height, Differential	EH	32			mV
Differential Output Return Loss		See Eq. 1			
Common to Differential Mode Conversion Return Loss		See Eq. 2			
Differential Termination Mismatch		10			%
Transition Time (20% To 80%)	Tr, Tf	10			ps
Receiver At TP4					
Far-End Eye height, Differential		30			
Far-End Pre-Cursor ISI Ratio		-4.5		2.5	%
Differential Output Return Loss	λ	See Eq. 1			
Common to Differential Mode Conversion Return Loss		See Eq. 2			
Differential Termination Mismatch		10			%
Transition Time (20% To 80%)	Tr, Tf	10			ps
DC Common Mode Voltage		-350		2850	mV

1. $RLd(f) \geq \begin{cases} 9.5 - 0.37f & 0.01 \leq f < 8 \\ 4.75 - 7.4\log_{10}\left(\frac{f}{14}\right) & 8 \leq f < 19 \end{cases}$ (dB) (Eq.1)

where

f is the frequency in GHz, RLdc is the CAUI-4 Chip-to-module input differential to common mode input return loss

2. $RLdc(f) \geq \begin{cases} 22 - 20\left(\frac{f}{25.78}\right) & 0.01 \leq f < 12.89 \\ 15 - 6\left(\frac{f}{25.78}\right) & 12.89 \leq f < 19 \end{cases}$ (dB) (Eq.1)

where

f is the frequency in GHz, RLdc is the CAUI-4 Chip-to-module input differential to common mode input return loss

Electrical Characteristics for QSFP

Parameter	**Symbol**	**Min.**	**Typ.**	**Max.**	**Unit**	**Ref**
Transmitter at TP1a						
AC Common-Mode Output Voltage (RMS)				17.5	mV	
Differential Peak-to-Peak Output Voltage (Transmitter Disabled)				35	mV	
Differential Peak-to-Peak Output Voltage (Transmitter Enabled)				880	mV	
Eye Symmetry Mask Width	ESMW		0.22		UI	
Eye Height, Differential	EH	32			mV	
Differential Output Return Loss		See Eq. 1				
Common to Differential Mode Conversion Return Loss		See Eq. 2				
Differential Termination Mismatch		10			%	
Transition Time (20% To 80%)	Tr, Tf	10			ps	
Receiver At TP4						

Far-End Eye height, Differential		30		
Far-End Pre-Cursor ISI Ratio		-4.5	2.5	%
Differential Output Return Loss	λ	See Eq. 1		
Common to Differential Mode Conversion Return Loss		See Eq. 2		
Differential Termination Mismatch		10		%
Transition Time (20% To 80%)	Tr, Tf	10		ps
DC Common Mode Voltage		-350	2850	mV

1. $RLd(f) \geq \begin{cases} 9.5 - 0.37\mathrm{f} & 0.01 \leq \mathrm{f} < 8 \\ 4.75 - 7.4\log_{10}\left(\frac{f}{14}\right) & 8 \leq \mathrm{f} < 19 \end{cases}$ (dB) (Eq.1)

where

f is the frequency in GHz, RLdc is the CAUI-4 Chip-to-module input differential to common mode input return loss

2. $RLdc(f) \geq \begin{cases} 22 - 20\left(\frac{f}{25.78}\right) & 0.01 \leq \mathrm{f} < 12.89 \\ 15 - 6\left(\frac{f}{25.78}\right) & 12.89 \leq \mathrm{f} < 19 \end{cases}$ (dB) (Eq.1)

where

f is the frequency in GHz, RLdc is the CAUI-4 Chip-to-module input differential to common mode input return loss

General Product Characteristics

Parameter	**Value**	**Unit**	**Comments**
Module Form Factor	OSFP and QSFP		Module Form Factor
Number Of Lanes	8 TX and 8 RX		
Maximum Aggregate Data Rate	425(OSFP) 212.5(QSFP)	Gb/s	
Maximum Data Rate Per Lane	53.125	Gb/s	
Standard Cable Lengths	3, 5, 7,10, 15, 20	m	Other lengths may be available upon request
Protocols Supported	InfiniBand, Ethernet		
Electrical Interface And Pinout	60-pin edge connector (OSFP) 38-pin edge connector (QSFP56)		Pin-out as defined by OSFP Rev. 5.0 & QSFP SFF8679
Standard Optical Cable Type	Multimode OM3(≤70m) Multimode OM4(<100m)		
Maximum Power Consumption Per End	8 (OSFP) and 4 (QSFP56)	W	Varies with output voltage swing and pre-emphasis settings
Management Interface	Serial, I2C-based, 400 kHz maximum frequency		As defined by CMIS Rev 4.0

The force specification for AOC is in the list below:

Parameter	Min.	Max.	Unit.	Comments.
Module Insertion		40 (OSFP) 40 (QSFP56)	N	
Module Extraction		30 (OSFP) 30 (QSFP56)	N	
Module Retention	125 (OSFP) 90 (QSFP56)		N	
Insertion And Removal Cycles	50		Cycle	
Cable Outer Diameter	2.9	3.1	mm	
Fiber Cable Material	Aqua, OFNP, Corning fiber			

Pin Desciptions (compliant OSFP Rev. 5.0)

Pin	Symbol	Description	Plug Sequence
1	GND	Ground	1
2	TX2p	Transmitter Data Non-Inverted	3
3	TX2n	Transmitter Data Inverted	3
4	GND	Ground	1
5	TX4p	Transmitter Data Non-Inverted	3
6	TX4n	Transmitter Data Inverted	3
7	GND	Ground	1
8	TX6p	Transmitter Data Non-Inverted	3
9	TX6n	Transmitter Data Inverted	3
10	GND	Ground	1
11	TX8p	Transmitter Data Non-Inverted	3
12	TX8n	Transmitter Data Inverted	3
13	GND	Ground	1
14	SCL	2-wire Serial interface clock	3
15	VCC	+3.3V Power supply	2
16	VCC	+3.3V Power supply	2
17	LPWn/PRSn	Low-Power Mode / Module Present	3
18	GND	Ground	1
19	RX7n	Receiver Data Inverted	3
20	RX7p	Receiver Data Non-Inverted	3
21	GND	Ground	1
22	RX5n	Receiver Data Inverted	3
23	RX5p	Receiver Data Non-Inverted	3
24	GND	Ground	1
25	RX3n	Receiver Data Inverted	3
26	RX3p	Receiver Data Non-Inverted	3
27	GND	Ground	1
28	RX1n	Receiver Data Inverted	3
29	RX1p	Receiver Data Non-Inverted	3
30	GND	Ground	1
31	GND	Ground	1

32	RX2p	Receiver Data Non-Inverted	3
33	RX2n	Receiver Data Inverted	3
34	GND	Ground	1
35	RX4p	Receiver Data Non-Inverted	3
36	RX4n	Receiver Data Inverted	3
37	GND	Ground	1
38	RX6p	Receiver Data Non-Inverted	3
39	RX6n	Receiver Data Inverted	3
40	GND	Ground	1
41	RX8p	Receiver Data Non-Inverted	3
42	RX8n	Receiver Data Inverted	3
43	GND	Ground	1
44	INT/RSTn	Module Interrupt / Module Reset	3
45	VCC	+3.3V Power	2
46	VCC	+3.3V Power	2
47	SDA	2-wire Serial interface data	3
48	GND	Ground	1
49	TX7n	Transmitter Data Inverted	3
50	TX7p	Transmitter Data Non-Inverted	3
51	GND	Ground	1
52	TX5n	Transmitter Data Inverted	3
53	TX5p	Transmitter Data Non-Inverted	3
54	GND	Ground	1
55	TX3n	Transmitter Data Inverted	3
56	TX3p	Transmitter Data Non-Inverted	3
57	GND	Ground	1
58	TX1n	Transmitter Data Inverted	3
59	TX1p	Transmitter Data Non-Inverted	3
60	GND	Ground	1

Name	**Direction**	**Description**
TX[8:1]p	input	Transmit differential pairs from host to module.
TX[8:1]n	input	
RX[8:1]p	output	Receiver differential pairs from module to host.
RX[8:1]n	output	
SCL	bidir	2-wire serial clock signal. Requires pull-up resistor to 3.3V on host.
SDA	bidir	2-wire serial data signal. Requires pull-up resistor to 3.3V on host.
LPWn/PRSn	bidir	Multi-level signal for low power control from host to module and module presence indication from module to host. This signal requires the circuit as described in Section 11.5.3
INT/RSTn	bidir	Multi-level signal for interrupt request from module to host and reset control from host to module. This signal requires the circuit as described in Section 11.5.2
VCC	power	3.3V power for module.
GND	ground	Module Ground. Logic and power return path.

Ordering Information

Product Name	Product Description
OSFP-2Q56-AOC-003	400G OSFP to 2x200G QSFP56 Active Optical Breakout Cable, IB twin port HDR, 3m (10ft)
OSFP-2Q56-AOC-005	400G OSFP to 2x200G QSFP56 Active Optical Breakout Cable, IB twin port HDR, 5m (16ft)
OSFP-2Q56-AOC-010	400G OSFP to 2x200G QSFP56 Active Optical Breakout Cable, IB twin port HDR, 10m (33ft)
OSFP-2Q56-AOC-015	400G OSFP to 2x200G QSFP56 Active Optical Breakout Cable, IB twin port HDR, 15m (49ft)
OSFP-2Q56-AOC-020	400G OSFP to 2x200G QSFP56 Active Optical Breakout Cable, IB twin port HDR, 20m (66ft)
OSFP-2Q56-AOC-030	400G OSFP to 2x200G QSFP56 Active Optical Breakout Cable, IB twin port HDR, 30m (98ft)

Contact Information

Ascent Communication Technology Ltd

AUSTRALIA
140 William Street, Melbourne
Victoria 3000, AUSTRALIA
Phone: +61-3-8691 2902

HONG KONG SAR
Unit 9, 12th Floor, Wing Tuck Commercial Centre
177 Wing Lok Street, Sheung Wan, HONG KONG
Phone: +852-2851 4722

CHINA
Unit 1933, 600 Luban Road
200023, Shanghai CHINA
Phone: +86-21-60232616

USA
2710 Thomes Ave
Cheyenne, WY 82001, USA
Phone: +1-203 816 5188

EUROPE
Pfarrer-Bensheimer-Strasse 7a
55129 Mainz, GERMANY
Phone: +49 (0) 6136 926 3246

VIETNAM
15 /F TTC Building, Duy Tan Street
Cau Giay Dist., Hanoi, VIETNAM
Phone: +84 243 795 5917

WEB: www.ascentcomtec.com

EMAIL: sales@ascentcomtec.com

Specifications and product availability are subject to change without notice.
Copyright © 2022 Ascent Communication Technology Limited. All rights reserved.
Ver. ACT_OSFP_2Q56_AOC_030_Datasheet_V1b_Sep_2022